AGENDA

PLANNING COMMISSION
EDWARDSVILLE, KANSAS

October 19, 2016
7:00 p.m.

John Altevogt	Mark Bishop	Erin Harves
Jeff Martinek	Bryan Smith	Tim Sweeten
	Ralph Eaton	

---

1. Call meeting to order

2. Minutes from September 21, 2016 Meeting

3. New Business:
   a. **Preliminary Plan and Special Use Permit (Continued discussion from September 21, 2016 Meeting)**– 201 N. 4th Street (2016-09 PPN / 2016-10 SUP) -Lois D. Roberts, Owner / Selective Site Consultants - Applicant

4. Staff Reports

   a. Development Updates

5. Planning Commission Comments

6. Adjournment

EDWARDSVILLE PLANNING COMMISSION
EDWARDSVILLE CITY HALL COUNCIL CHAMBERS
690 SOUTH 4TH STREET P O BOX 13738
EDWARDSVILLE, KANSAS 66113

MINUTES September 21, 2016

Members Present: John Altevogt, Erin Harves, Jeff Martinek, Mark Bishop, Ralph Eaton, Tim Sweeten, Bryan Smith

Staff Present: Dave Knopick, City Planner
Zack Daniel, Assistant to the City Manager/City Clerk

Regular Meeting

The regular meeting was called to order by Chairman Jeff Martinek at 7:05 p.m.

Minutes from August 17, 2016

Commissioner Bishop motioned to approve the minutes of August 17, 2016.

Commissioner Eaton seconded the motion.

The motioned carried 7-0

New Business

(a) Preliminary and Final Development Plan – PUBLIC HEARING – 9154 Woodend Rd. (2016-06 PPN / 2016-07 FPN) Woodend Holdings, LLC – Owner/Kaster Architects, Inc. – Applicant

(b) Re-Plat – PUBLIC HEARING – 9154 Woodend Rd. (2016-08-FPT) Woodend Holdings, LLC – Owner/Story Surveyors - Applicant

City Planner Dave Knopick summarized the two items as well as introduced representatives of the applicants who were in attendance. The items will be discussed in tandem as they are related to the same property. Commissioner Bishop made the motion to open the public hearing and Commissioner Altevogt seconded the motion. The motion carried with a unanimous vote. Mr. Knopick reviewed the scope of the proposed expansion as well as the Design Review Committee's comments. The revised plan based on these comments represents the final development plan. There was some discussion related to applicable requirements of the fire code. Mr. Knopick then reviewed the conditions for both the preliminary plan and the final plan. The appearance of the front of the buildings, including aesthetics of the architectural bump-outs, was also discussed.

Commissioner Sweeten made the motion to recommend approval of the preliminary plan with the conditions set forth in the staff report. Chairman Martinek seconded the motion. The motion passed unanimously.

Chairman Martinek made the motion to accept the final plan with the conditions set forth in the staff report. Commissioner Bishop seconded the motion. The motion passed unanimously.

Mr. Knopick then reviewed the final plat application, noting that the necessary utility providers and UG representatives had received copies of the proposed plat to review. Mr. Knopick also reviewed the subdivision regulations related to the application. The conditions for approval which staff recommended were largely perfunctory and involve cleaning up typos and meeting UG filing requirements.

Commissioner Sweeten made the motion to recommend approval of the final plat with the staff recommendations. Chairman Martinek seconded the motion. The motion passed unanimously.

Mr. Knopick noted that these items would be before City Council at the October 10, 2016 meeting.

Commissioner Bishop made the motion to close the public hearing. Commissioner Harves seconded the motion. The motion passed unanimously.

(c) Preliminary Plan and Special Use Permit – PUBLIC HEARING – 201 N. 4thSt. (2016-09 PPN / 2016-10 SUP) – Lois Roberts, Owner/Selective Site Consultants Applicant

Mr. Knopick, after providing an overview of the application and staff report, introduced Justin Anderson, of Selective Site Consultants representing the property owner Ms. Roberts. Mr. Anderson made a presentation wherein he detailed the site design including landscaping and access. He pointed out that there were no collocation opportunities in the proposed coverage area that could replace the proposed cell tower. Mr. Anderson reviewed coverage information and pointed out the nearest sites. He showed a map that displayed the existing LTE coverage the area and how that would be improved with the new tower. Finally, he provided photo simulations of what the site would look like.

Several Commissioners asked Mr. Anderson why the proposed site was selected. Mr. Anderson responded that the proposed site offered the best coverage opportunities in the area, including several of the sites asked about by Commissioners. There was also discussion related to the tower's potential effect on future development in the northeast corner of K-32 & 4th St. Commissioner Smith then made the motion to open the public hearing. Commissioner Eaton seconded the motion, which passed unanimously.

John Williamson, local business owner, expressed dissatisfaction with the site selection. Mr. Williamson stated that there were other sites in town that would not be as visible as what is proposed.

Joey Woodbury, 717 N. 7th St., also spoke in opposition to the tower. Mr. Woodbury stated that it would be an eyesore in the area where most commuters travel through Edwardsville.

After additional discussion related to the future viability of commercial development on the property surrounding the prosed site, as well as the application off the "golden criteria", Commissioner Eaton made the motion to close the public hearing. Commissioner Altevogt seconded the motion, which passed unanimously.

Commissioner Sweeten made the motion to table discussion and official action on this item pending additional staff analysis of the application of the "golden criteria" in this case and the applicant looking at potentially moving the proposed site further north on the same property. Commissioner Altevogt seconded the motion, which passed unanimously.

Staff Reports

Mr. Knopick provided an update on planning activity in the community and Assistant to the City Manager/City Clerk Zack Daniel provided an update on construction activity related to the LTC Sewer project.

Planning Commission Comments

No comments from the Planning Commission.

Adjournment

Chairman Jeff Martinek adjourned the meeting at 8:44 p.m.

The next scheduled meeting is October 19, 2016.

Minutes submitted by Zack Daniel, Assistant to the City Manager/City Clerk

City of Edwardsville
Staff Analysis Report
Planning Commission October 19, 2016

Item 3a – (Continued Discussion from September 21, 2016 Meeting) Concept Plan / Special Use Permit (2016-09-PPN / 2016-10-SUP)

General Information

Applicant: Lois Roberts (Owner) / SSC – Justin Anderson (Applicant)
Location: 201 North 4th Street
Applications: Preliminary Plan (2016-09-PPN) and Special Use Permit (2016-10-SUP)

Zoning & Overlay: C-2 Commercial Retail District
Existing Land Use: Vacant
Proposed Land Use: Commercial / Cellular Tower

Background

On August 10, 2015 the applicant filed a concept plan and a special use permit application related to approximately 2.045 acres of land located on the northeast corner of 4th Street and Kaw Drive. This property was recently re-platted as a single lot bounded by 4th Street, High Drive, 5th Street and Kaw Drive (K-32). The property is located in the C-2 Commercial Retail Zoning District.

Currently the site is vacant and zoned for commercial use. The proposed use (cellular tower) is described in the attached cover letter provided by the applicant. This proposed use and any future use of the property is subject to further review and approval for zoning and development compliance per the C-2 district and the site / architectural plan review process. The applicant was required to submit a conceptual plan for the entire property at this time to show how the proposed use could fit in a future build out scenario for the property.

City staff reviewed the submitted concept plan and special use permit application materials and provided comments to the applicant on August 30, 2016. On September 6, 2016 the applicant submitted revised plans and responses in response to the review comments. These revised plans are provided as part of the agenda item packet.

On September 21, 2016 the Planning Commission held a public hearing in regard to this item. Two citizens spoke in regard to concerns related to the proposed SUP. After closing the public hearing, the Planning Commission decided to table this item until the October 19, 2016 meeting. The Planning Commission requested two pieces of additional information be provided for consideration: 1) further staff analysis related to the application of the "golden criteria" to this item, and 2) a revised site plan from the applicant showing the cell tower moved further to the north on the property.

Analysis

The following analysis of the "golden criteria" as provided in Section 14.06.03.006 H 9 of the Edwardsville Zoning Regulations is intended to supplement the staff analysis provided in the previous staff report for September 21, 2016. This analysis is provided in response to the request for additional analysis by the Planning Commission.

1. *Would the change in district classification (special use permit) be consistent with the purposes of these regulations and the intent of the proposed (current) district?*

   In this case a change of zoning district classification is not being requested. The property is zoned C-2 Commercial Retail and would remain C-2. The intent of the C-2 District is as follows:

   > The Commercial Retail District (C-2) is intended to accommodate small and medium scale commerce activities and development for primarily commercial retail trade and sales, professional office / limited service oriented opportunities serving the Edwardsville community and immediately surrounding area, as well as community oriented cultural / entertainment / recreational / social venues. All uses that require Commercial Retail (C-2) zoning are subject to the architectural / site plan review process outlined in Section 14.06.03.006 J of these regulations.

   The proposed use of a small portion of the property is for a telecommunications tower. Telecommunications towers are allowed as special uses in the C-2 district. The special use designation is to address the following:

   > Because of particular factors associated with their activities, certain uses which might have an adverse effect upon nearby properties or upon the character and future development of a district are not permitted outright in districts, but are permitted as "special uses" when their proposed location is supplemented by additional conditions such as to make the use considered compatible with the surrounding property, the neighborhood and the zoning district.

2. *What is the character and condition of the surrounding neighborhood?**

   The property is located within the context of residential, commercial and institutional uses. Residential properties consist of single family homes with accessory structures. The properties and structures are generally in fair to good condition on .15 acre to .75 acre lots. Commercial properties are located to east and south. The uses and activities are primarily office, commercial service and commercial retail. One adjacent property to the east is vacant. A place of worship is located to the west of the property.

   4th and Kaw Drive (K-32) is a signalized intersection with K-32 serving as a State Highway serving both local and regional traffic. 4th Street / Edwardsville Drive / 110th Street is the primary north – south arterial in Edwardsville. There are no sidewalks adjacent to the property, and roadway improvements and conditions vary as follows: High Drive – asphalt with no curb or gutter, generally poor condition; 5th Street – asphalt with no curb gutter on the west side of the road and partial curb and gutter on the east side of the road, generally poor condition; Kaw Drive (K-32) – asphalt with curb and gutter, generally good condition; and, 4th Street – asphalt with curb and gutter, generally in good condition.

3. *What are the uses of property nearby and their district classification?**

   North – residential uses / R-2 Medium Density Residential
   East – vacant land / R-2 Medium Density Residential and commercial office / C-2 Commercial Retail
   South – vacant and service commercial / C-1 Neighborhood Commercial and I-1 Industrial Non-Hazard
   West – institutional / R-2 Medium Density Residential

4. *Is the proposed amendment (special use permit) requested because of changed or changing conditions in the area affected and, if so, what is the change?*

   There has not been any recent change or changing conditions physically to the area that would appear to be driving this proposal. There is a desire to provide better telecommunications service in the area between K-7 and I-435 along Kaw Drive (K-32).

5. Is the subject property suitable for the uses (proposed use) to which it is restricted by the current district classification?*

   The proposed use would be located on a small portion of the overall property. There are topographic issues that will need to be mitigated by or integrated in the overall development of the property. Therefore, a conceptual development plan showing the proposed use within the context of potential future commercial development of the property is provided. The location proposed will requires topographic / land disturbance and allows for the future commercial development of the overall property. The proposed use will be visible primarily because of the height / scale of the tower and antenna facilities. The visual impact will be noticeable no matter where the proposed use is placed on the property.

6. *Is the subject property suitable for the uses that are permitted by the proposed district reclassification (special use permit)?*

   Topographically, the overall property is challenging for future development do to the change of grade on and adjacent to the property. Vehicular access is also an issue for the property given current State and local access management policies. Local policies require separation distances of 150 feet from any drive access to the intersection of an arterial (K-32) and 20 feet from any access drive and the intersection of a local / residential street. It is also the policy of the city to discourage commercial traffic on residential streets. Additionally, the State will not allow access directly on to K-32 at this location. The proposed use is a low traffic generator. Traffic will be vehicular in nature and service oriented.

   Additionally, the property has access to primary infrastructure and utility service facilities.

7. *Would the uses permitted by the proposed district reclassification (special use permit) and the accompanying restrictions have a detrimental affect on nearby property?**

   The greatest potential detrimental impacts are related to proximity and visibility of the proposed use, and further commercial development in the future. Placement of such proposed uses are usually associated with commercial development, industrial development, larger parcels in undeveloped areas, and travel corridors. In this case the property is located near residential properties and a state highway. So, the primary potential impacts of concern in this case include visibility from adjacent residential properties, visibility from K-32 related to the perception of the community, and proximity to residential properties. Additionally, the location of the proposed use on the property will set into motion the pattern for further development of the property.

8. *Would the proposed amendment (special use permit) correct an error in the application of these regulations as applied to the subject property?*

   There are no known errors related to the application of the zoning regulations on this property.

9. *Should the length of time the subject property has remained vacant be a factor in the consideration for reclassification (the special use permit)?**

   Commercial market conditions within Edwardsville are predicated upon the further development of residential density and employment opportunities. This property will achieve greater commercial development value as traffic counts on 4th Street and on Kaw Drive (K-32) increase, more housing within the primary market trade area increases and employers within the market trade area grow. The property is in a highly visible location and active crossroads in the community which lends itself to commercial development in the future.

10. *Do adequate utilities and streets exist or will they be provided to serve the uses that would be permitted by the proposed district reclassification (special use permit)?*

    The property is located at a signalized intersection with frontage along Kaw Drive (K-32). Infrastructure capable of supporting the allowable uses is available in close proximity to the property. Necessary changes / improvements to the infrastructure will be driven by the development of the property. In regard to streets and sidewalks, improvements will need to be made and will be the responsibility of the developer or funded through a special benefit district. It should be noted that both KDOT and local access restrictions apply to the property. Note additionally the comments associated with items 2 and 5 above.

11. *Is there a recommendation from a professional staff or consultant?**

    Note recommendation subject to conditions in the staff report.

12. *Would the proposed amendment (special use) be in conformance with the comprehensive plan?**

    The Edwardsville Plan describes a desire for the K-32 corridor to develop commercially in the future. Supporting that commercial development desire is the presence of medium density residential development in the future along the corridor also. This particular property is shown as a commercial property in the future land use map. Within the text of the plan is the following: *Commercial developments will continue to be located along major thoroughfares to capitalize on the high levels of traffic and visibility. This includes K-32 and South 4th Street for more localized traffic, as well as high-visibility intersections such as I-435 and Kansas Avenue, I 435 and Woodend Road, and I-70 and 110th Street.*

    In addition to the comprehensive plan, the recently accepted *K-32 Tri-City Multimodal Redevelopment Plan* identifies this area and parcel as a focal point for future commercial develop. As part of that plan a future mixed-use development concept was indicated for this property including actions steps for land-use, transportation and place-making. The concept contemplates government, retail, and residential use of the property with parking on the property when fully developed.

    These plans recognize the critical nature of this property in regard to the overall presence and perception of the community at the intersection of 4th Street and Kaw Drive (K-32). Neither plan specifically addresses the location of the proposed use on the property.

13. *Does the relative gain to the public health, safety and welfare outweigh the hardship imposed upon the applicant by not reclassifying (issuing the special use permit on) the property?**

    It appears that there are other properties along the K-32 corridor in close proximity to the proposed site / property that could accommodate the proposed use and would be less visible to

residential properties and to traffic along K-32. These properties / sites are generally further away from local roadways and appear to be at an elevation equivalent to or higher than the subject property. Additionally, there appears to be a greater amount of vegetation and natural buffering between some of these properties and residential structures. Without knowing if these sites were previously investigated or if such sites offer an equivalent amount of service / coverage improvement as the proposed site / property it is difficult to determine if such a hardship would be incurred by the applicant. Therefore, while these other properties may better serve the public health, safety and welfare, over the current location, the potential hardship to the applicant is not known, in fact these other locations may even serve the applicant better than the proposed site / property.

It should be noted that the Planning Commission also requested that the applicant look at the potential of moving the proposed site to the north on the same property. The applicant's client has indicated that they have already invested in conducting study of this site and do not feel that requested look at a small move will change the effect on the area (among other reasons). Therefore they are not inclined to move the site from the proposed location.

Recommendation

The staff recommends that the Planning Commission recommend approval of the special use permit, for a ten year period, with the companion conceptual plan and other site / facility plan materials submitted on September 6, 2016 with the following conditions:

1. Adjust all plan documents to reflect up to date plat information per the recent replat of the property.
2. Move the proposed access drive to the tower as shown on 5th Street to the location identified as future access that is aligned with the existing drive on the east side of 5th Street on the conceptual development plan. This entry should be built as part of the proposed tower area to the west until it meets with the western edge (extended) of the paved area east of the proposed fenced area depicted on the submitted plan. The paved area adjacent to the tower fence (east side) should be extended to the entry drive to the north.
3. With revisions noted in item 2 above provide enhanced landscape screening east of the access / parking area.
4. The pad area associated with the fenced in area shall be a paved surface equivalent to the drive access and service parking area surfacing.
5. Fencing around the tower pad area to be 8 feet high and built to block the view into the area and be built in compliance with applicable fence requirements (materials, finished side facing outward, etc.). Through the fence permit process steps shall be identified to ensure durability of the fencing and maintain the long term appearance of the fence.
6. External lighting shall be placed in a manner that does not impact adjacent property or public areas.
7. Landscape materials to be kept in healthy condition and properly maintained to meet applicable requirements. All landscape screening provision / materials shall meet City regulations.
8. Signage to be limited to FFC required and warning signage in keeping with city sign regulations.
9. Public improvements (sidewalk / curb and gutter / roadway / utilities, etc.) adjacent to the proposed cell tower area are required, and are the responsibility of the property owner / applicant. The method by which such improvements will be constructed needs to be determined. As part of that determination a formal agreement that the property owner will not oppose the creation of a special benefit district and will participate in such district incorporating

the entire property at 201 North 4th Street for the provision of future public improvements adjacent to the entirety of the property will be required prior to the issuance of a building permit. Such improvements will be required prior to or as part of the development of the property.

Attachments

- Property Location Map
- Application Material: Concept Plan and Special Use Permit application materials

City of Edwardsville
Staff Analysis Report
Planning Commission September 21, 2016

Item 3c – **PUBLIC HEARING** Concept Plan / Special Use Permit (2016-09-PPN / 2016-10-SUP)

General Information

Applicant: Lois Roberts (Owner) / SSC – Justin Anderson (Applicant)
Location: 201 North 4th Street
Applications: Preliminary Plan (2016-09-PPN) and Special Use Permit (2016-10-SUP)

Zoning & Overlay: C-2 Commercial Retail District
Existing Land Use: Vacant
Proposed Land Use: Commercial / Cellular Tower

Background

On August 10, 2015 the applicant filed a concept plan and a special use permit application related to approximately 2.045 acres of land located on the northeast corner of 4th Street and Kaw Drive. This property was recently re-platted as a single lot bounded by 4th Street, High Drive, 5th Street and Kaw Drive (K-32). The property is located in the C-2 Commercial Retail Zoning District.

Currently the site is vacant and zoned for commercial use. The proposed use (cellular tower) is described in the attached cover letter provided by the applicant. This proposed use and any future use of the property is subject to further review and approval for zoning and development compliance per the C-2 district and the site / architectural plan review process. The applicant was required to submit a conceptual plan for the entire property at this time to show how the proposed use could fit in a future build out scenario for the property.

City staff reviewed the submitted concept plan and special use permit application materials and provided comments to the applicant on August 30, 2016. On September 6, 2016 the applicant submitted revised plans and responses in response to the review comments. These revised plans are provided as part of the agenda item packet.

Analysis

City Staff reviewed the application materials per the requirements related to the special use permits (Section 14.06.03.006 I); telecommunication towers (Section 14.06.06.005); and the C-2 zoning district requirements outlined in the City of Edwardsville zoning regulations. As noted above the applicant was required to submit a conceptual preliminary plan for the entire property which was also reviewed. Comments resulting from this review were forwarded to the applicant, and revised plans were submitted on September 6, 2016 to the City for consideration by the Planning Commission.

Additionally, it is important to note that recently passed state legislation related to telecommunications facilities is scheduled to take effect on October 1, 2016. As part of the review process staff took into consideration this new legislation and potential impacts in regard to the application of current local regulations. Additionally, the applicant utilized the concepts presented in the draft *K-32 Tri-City Multimodal Redevelopment Plan* to inform the concept plan for the entire property.

For staff, the primary guiding review considerations related to the proposed tower included:

- Maximizing the separation distance between the proposed tower and residential property.
- Minimizing the potential visual impact of the proposed tower.
- Integration of the proposed tower into a build out development concept for the entire property.

Additionally, the review took into consideration the existing topographic context and the importance of the 4th Street and Kaw Drive intersection in regard to connectivity (north / south, as well as east / west movement of people), and the future commercial development and image desires for Kaw Drive as stated by the comprehensive plan and the draft *K-32 Tri-City Multimodal Redevelopment Plan*.

Recommendation

As currently proposed the staff recommends that the Planning Commission recommend approval of the special use permit with the companion conceptual plan and other site / facility plan materials submitted on September 6, 2016 with the following conditions:

1. Adjust all plan documents to reflect up to date plat information per the recent replat of the property.
2. Move the proposed access drive to the tower as shown on 5th Street to the location identified as future access that is aligned with the existing drive on the east side of 5th Street on the conceptual development plan. This entry should be built as part of the proposed tower area to the west until it meets with the western edge (extended) of the paved area east of the proposed fenced area depicted on the submitted plan. The paved area adjacent to the tower fence (east side) should be extended to the entry drive to the north.
3. With revisions noted in item 2 above provide enhanced landscape screening east of the access / parking area.
4. The pad area associated with the fenced in area shall be a paved surface equivalent to the drive access and service parking area surfacing.
5. Fencing around the tower pad area to be 8 feet high and built to block the view into the area and be built in compliance with applicable fence requirements (materials, finished side facing outward, etc.). Through the fence permit process steps shall be identified to ensure durability of the fencing and maintain the long term appearance of the fence.
6. External lighting shall be placed in a manner that does not impact adjacent property or public areas.
7. Landscape materials to be kept in healthy condition and properly maintained to meet applicable requirements. All landscape screening provision / materials shall meet City regulations.
8. Signage to be limited to FFC required and warning signage in keeping with city sign regulations.
9. Public improvements (sidewalk / curb and gutter / roadway / utilities, etc.) adjacent to the proposed cell tower area are required, and are the responsibility of the property owner / applicant. The method by which such improvements will be constructed needs to be determined. As part of that determination a formal agreement that the property owner will not oppose the creation of a special benefit district and will participate in such district incorporating the entire property at 201 North 4th Street for the provision of future public improvements adjacent to the entirety of the property will be required prior to the issuance of a building permit.

Such improvements will be required prior to or as part of the development of the property.

Attachments

- Property Location Map
- Application Material: Concept Plan and Special Use Permit application materials

General Location Map 201 North 4th Street Special Use Permit and Development Plan

Case # 2016-09-PPN and 2016-10-SUP

September 21, 2016

DEVELOPMENT PLAN APPLICATION

CITY OF EDWARDSVILLE
690 South 4th Street, PO Box 13738
Edwardsville, KS 66113
913-441-3707 Phone / 913-441-3805 Fax

RECEIVED
AUG 10 2016

Date Received: _____ Case # _____

Property Location: 201 N. 4th Street

Name of Property Owner(s), Address, Phone, E-mail: Lois D. Roberts / 16547 158th St., Bonner Springs, KS 66012

(913) 238-9818

Name of Developer(s), Address, Phone, E-mail: SSC, represented by Justin Anderson / 9900 W. 109th St., Ste 300

Overland Park, KS 66210 / 913.438.7700 / janderson@ssc.us.com

Name of Applicant, Address, Phone, E-mail: Same as owner

Type of Development Plan and Application Fee:

_____Sketch / Concept $100 _X_Preliminary Plan $150 _____Final Plan $150 _____Revised / Amended Plan $150

Gross Acreage of Property: 1.69 Existing Zoning: EC2 - Commercial

Proposed Use of Property: Mixed use; commercial, office, retail, wireless facility

Checklist of Attachments submitted with application:

_X_Legal Description of property (hardcopy and electronic copy in Word Format)
_X_List of Consultants / Contractors with contact information
_X_Plan Drawing(s) / Study(ies) (3 full size copies; 1 half-size copy; electronic copy - PDF file: incorporating all contents required - Cover Sheet; Site Plan - Dimension Plan, Grading Plan, Storm water / Erosion Control Plan, Utility Plan, Landscape Plan, Storm water Report; Traffic / Transportation Study; Architectural Plans -Building Elevations, Building Floor Plan, Site Lighting Plan, Master Sign Plan, etc.)
_____Material / Color samples
_____Additional information (as required / requested) _____

The Applicant and Owner herein agrees to comply with the regulations for the City of Edwardsville, Kansas as amended an all other pertinent ordinances or resolutions of the City and Statutes of the State of Kansas. It is agreed that all City fees and third party review expenses shall be assumed and paid by the owner. The undersigned further states that he/she is the Owner of the property proposed for the Development Plan.

Owner's Signature: Lois D. Roberts Date: 8-6-16

Applicant's Signature: Justin B Anderson Date: 8/5/16

LAND USE / ZONING APPLICATION

CITY OF EDWARDSVILLE
690 South 4th Street, PO Box 13738
Edwardsville, KS 66113
913-441-3707 Phone / 913-441-3805 Fax

RECEIVED
AUG 10 2016

Date Received: _____ Case # _____

Property Address: TBD N. 5th St for proposed wireless facility; 201 N. 4th Street for whole parcel

Existing Zoning: Commercial Proposed Zoning: Commercial

Proposed Property Use: Wireless communications

Name of Property Owner(s): Lois D. Roberts

Address: 16547 158th Street, Bonner Springs, KS 66012

Phone: 913.238.9818 E-mail: N/A

Name of Applicant: Verizon Wireless - represented by SSC, Justin Anderson

Address: 9900 W. 109th Street, Suite 300, Overland Park, KS 66212

Phone: 913.438.7700 E-mail: janderson@ssc.us.com

Type of Application:
____ Zoning ($150) X Special Use Permit ($150) ____ Variance ($100) _____

Checklist of Attachments submitted with application (digital and hardcopy):

X Legal Description of property
X Sketch of the property (dimensions of the property and the area of the property)
X Certified mailing list of property owners located within 200 feet of the property
X Application Fee
X Written statement describing the reason(s) for the land use / zoning request
X Additional information (as provided / required / requested) _____

The Applicant and Owner herein agrees to comply with the regulations for the City of Edwardsville, Kansas as amended an all other pertinent ordinances or resolutions of the City and Statutes of the State of Kansas. It is agreed that all City fees and third party review expenses shall be assumed and paid by the owner. The undersigned further states that he/she is the Owner of the property identified above.

Owner's Signature: Lois D. Roberts Date: 8-6-16

Applicant's Signature: Justin B Anderson Date: 8/5/16

August 10, 2016

VIA HAND DELIVERY

City of Edwardsville
690 S. 4th Street
Edwardsville, KS 66113
Attn: Dave Knopick

RE: Verizon Wireless (KCYC Edwardsville) application for approval of a Special Use Permit for construction of a wireless communications facility to be located at TBD N. 5th Street – property owned by Lois Roberts.

Dear City Staff:

Verizon Wireless is applying for a Special Use Permit for the installation of a 120' (130' w/ lightning rod) monopole wireless communications facility located on N. 5th Street, just north of K-32 / Kaw Drive.

SITE DESIGN

The proposed Verizon Wireless facility will be enclosed in a 50' x 50' wooden fenced area. The design submitted with this application will elaborate on the equipment that will be contained within the fenced area. Verizon Wireless will use outdoor equipment for their radio equipment (8' x 8' platform). The proposed fenced area will also enclose the tower and future wireless carriers for collocation (no less than 2 additional). The applicant is proposing landscaping on the west and south sides of the project – most likely to be visible by public. Although we reference specific species of trees / shrubs to be provided for landscaping, we will plant alternatives if requested.

There will be no lighting required for this tower unless required by the Federal Aviation Administration. There will be no signs at this site except for safety and identification as required by the Federal Communications Commission. These are not lighted and are affixed to the front / gate area of the site.

Parking will be provided within the access easement of the agreement and will be paved as required by City Code.

Access will be gained from a proposed 12'wide access drive which is approximately 35' west of N. 5th Street. Underground utilities will be provided along the proposed utility easement which is also extended west to the site from N. 5th St. in the designated 20' wide access / utility easement. The proposed easements are non-exclusive to any permanent design and can become part of a future development.

9900 WEST 109TH STREET, SUITE 300
OVERLAND PARK, KANSAS 66210
p 913.438.7700
f 913.438.7777
ssc.us.com

The structural design of a monopole is graded by a Rev G Class II standard.

PRELIMINARY DEVELOPMENT PLAN

We have provided a hypothetical Preliminary Development Plan although the current owner has no designated use for the property. After discussions with the City staff and owner, the plan will allow walk-up store or office frontage along K-32, as portrayed in the K-32 Development Plan. We have designed building space with approximately 21,000 square feet of commercial / office / retail with the necessary parking matrix. Parking has been designed to the "rear" of the lot with access from 4th and 5th Streets. A large berm and landscaping are being proposed along High Street and landscaping along 5th Street. It's our opinion that additional building square footage and parking are viable for future development, however at this time the property owner nor applicant have insight to what that design may encompass. Our presented design is modeled to reflect the K-32 Development Plan.

ADDITIONAL MATTERS

This site is required to maintain Verizon Wireless's network coverage and capacity stability. Verizon Wireless customers rely on capacity sites as part of Verizon Wireless's network and rapidly growing data services. This area currently has diminished capacity therefore this proposed site's will have the ability to help offload data traffic and capacity from surrounding sites. By helping to offload existing capacity of the neighboring sites, this tower will help existing sites more efficient and effective.

Please direct any further questions or requirements to Justin Anderson.

Sincerely,

Justin Anderson

Attachments

verizon

From: Hank Madden – RF Engineer, Verizon Wireless July 8, 2016

To: **The City Representatives**

RE: **Proposed Edwardsville cell site**

Dear City Representatives,

Verizon Wireless is proud to serve the greater Kansas City, KS area including the community of Edwardsville and we are always diligent to maintain excellent service and improvements. At this time, Verizon Wireless is trying to enhance the area of southwest portions of Wyandotte County, KS where coverage service reliability and performance must be improved. The area that needs improvement at this time in both coverage and performance is the area of the city of Edwardsville located just west of I435. The fast growing 4G (LTE) data usage has required Verizon Wireless to plan for a new cell site in this area as shown below, Map 1.

Map 1 – Existing Coverage

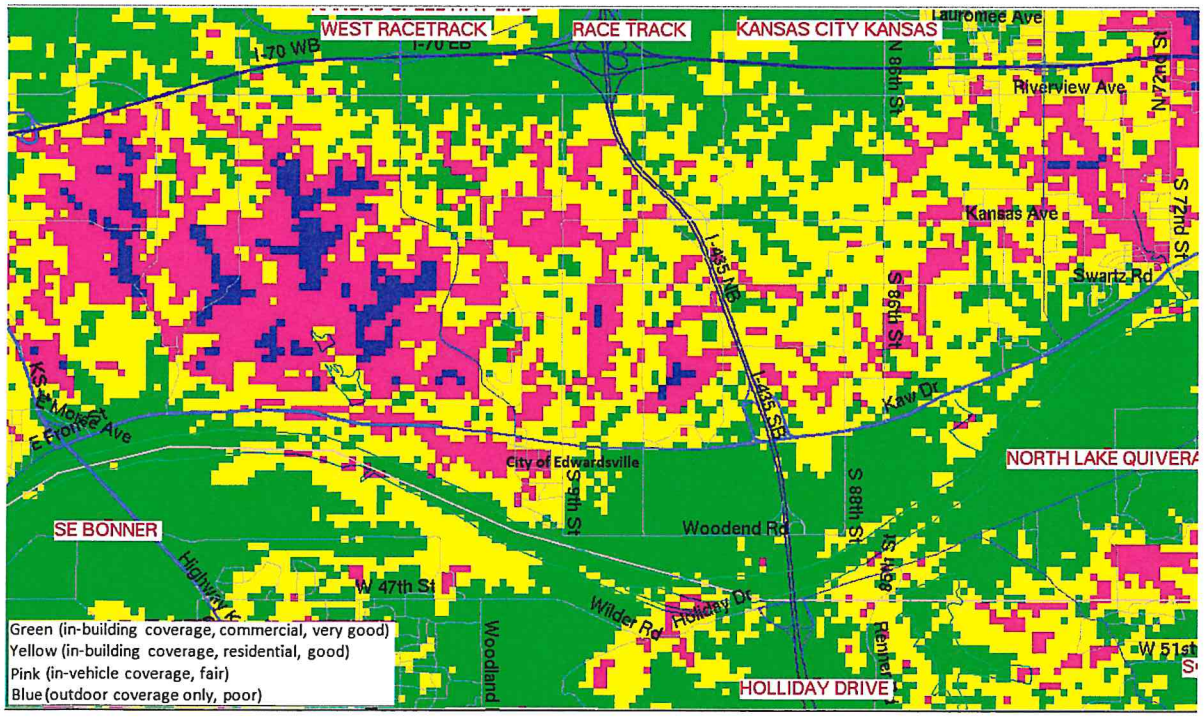

Below is Map 2 showing coverage improvement with the proposed new cell site, Edwardsville.

Map 2 – Coverage with the new cell site, Edwardsville

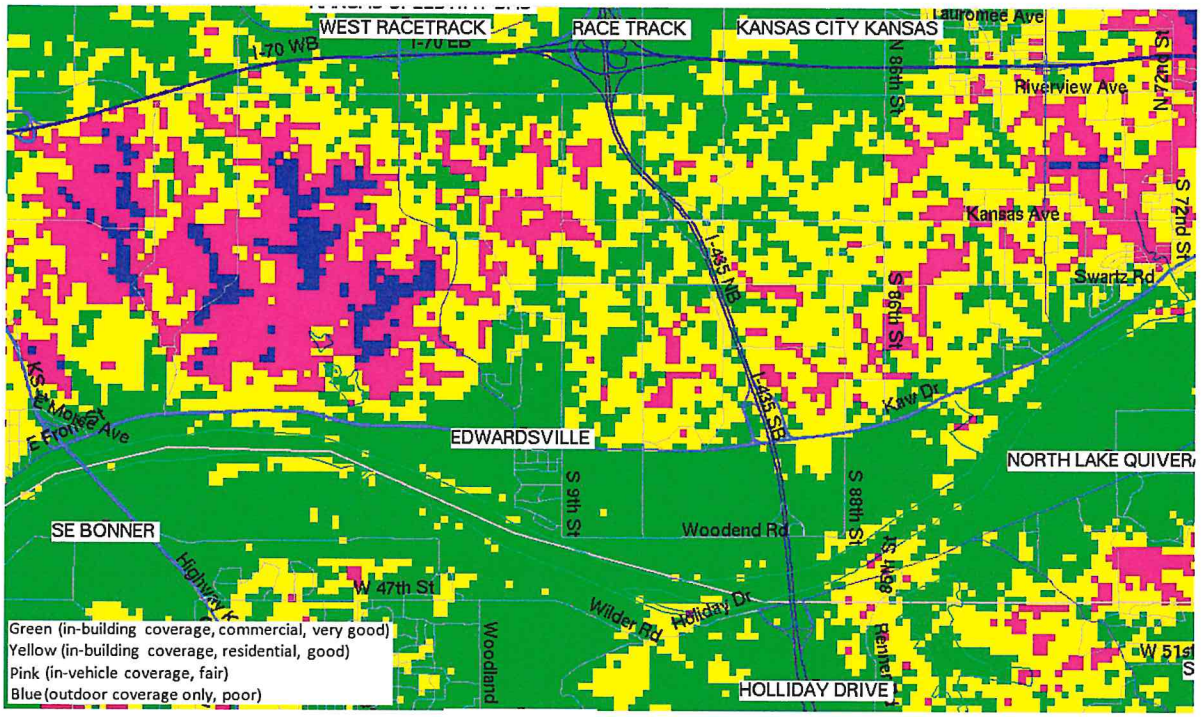

As 4G (LTE) data usage continues to increase dramatically as wireless customers utilize their wireless devices for more day to day task and recreation, the demand also increases to meet these needs by creating new opportunities to develop methods of improving coverage, capacity, and data throughput. The most challenging is capacity and data throughput. Verizon Wireless is meeting the expectations of our customers by designing this proposed cell site in the Edwardsville area.

This coverage improvement will afford Verizon Wireless customers the best possible data performance at the location identified. Verizon Wireless continues to strive to provide the best possible wireless experience for its customers while still recognizing the needs and desires of the surrounding community and being a good neighbor.

verizon wireless
SSC
KCYC Edwardsville
Edwardsville, Kansas
9900 W. 109th St. Suite 300
Overland Park, Kansas 66210
913 438 7700

verizon wireless

KCYC Edwardsville
Edwardsville, Kansas

SSC

9600 W. 109th St, Suite 300
Overland Park, Kansas 66210
913 438 7700

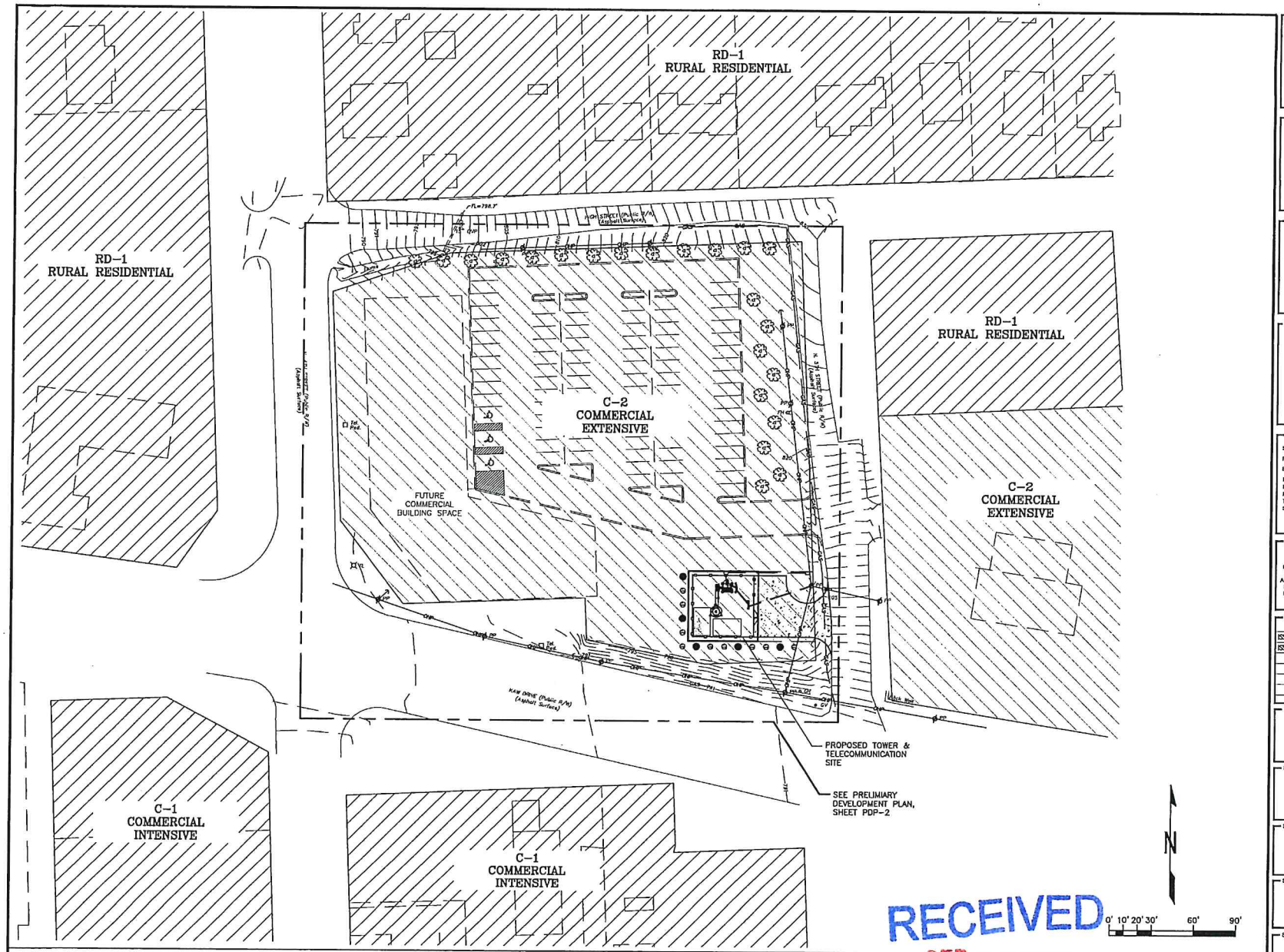

EXISTING ZONING DISTRICT PLAN

1

RECEIVED
SEP 06 2016

PLANS PREPARED FOR:

verizon ✓

PLANS PREPARED BY:

9900 West 109th Street, Suite 300
Overland Park, Kansas 66210
Phone: 913-438-7700
Fax: 913-438-7777
SSC

ENGINEERING LICENSE:

STATE OF KANSAS
PE CERTIFICATE OF AUTHORIZATION #E-57
ENGINEER: PE #
MLO MICHAEL L. OWENS STRUCTURAL/CIVIL SC
KV KEVIN VANMAE STRUCTURAL/CIVIL SC
REJ ROBERT E 6098 STRUCTURAL/CIVIL SC
TMS TERR 8250 ELECTRICAL E
SDK REISUNG 13854 ELECTRICAL E

PRELIMINARY ISSUE

DRAWING NOTICE:

THIS DRAWING HAS NOT BEEN PUBLISHED AND IS THE SOLE PROPERTY OF SSC, INC. AND IS LENT TO THE BORROWER FOR THEIR CONFIDENTIAL USE ONLY, AND IN CONSIDERATION OF THE LOAN OF THIS DRAWING, THE BORROWER PROMISES AND AGREES TO RETURN IT UPON REQUEST AND AGREES THAT IT WILL NOT BE REPRODUCED, COPIED, LENT OR OTHERWISE DISPOSED OF DIRECTLY OR INDIRECTLY, NOR USED FOR ANY PURPOSE OTHER THAN FOR WHICH IT IS FURNISHED.

SUBMITTALS

DESCRIPTION	DATE	BY	REV
ISSUED FOR REVIEW	08/08/16	GAA	A
ISSUED FOR REVIEW	09/02/16	GAA	B

SITE NAME:

KCYC
EDWARDSVILLE

SITE NUMBER:

300431

SITE ADDRESS:

201 NORTH 4TH STREET
EDWARDSVILLE, KANSAS
66111

SHEET DESCRIPTION:

EXISTING ZONING
DISTRICT PLAN

SSC #:

SHEET NUMBER:

PDP-1

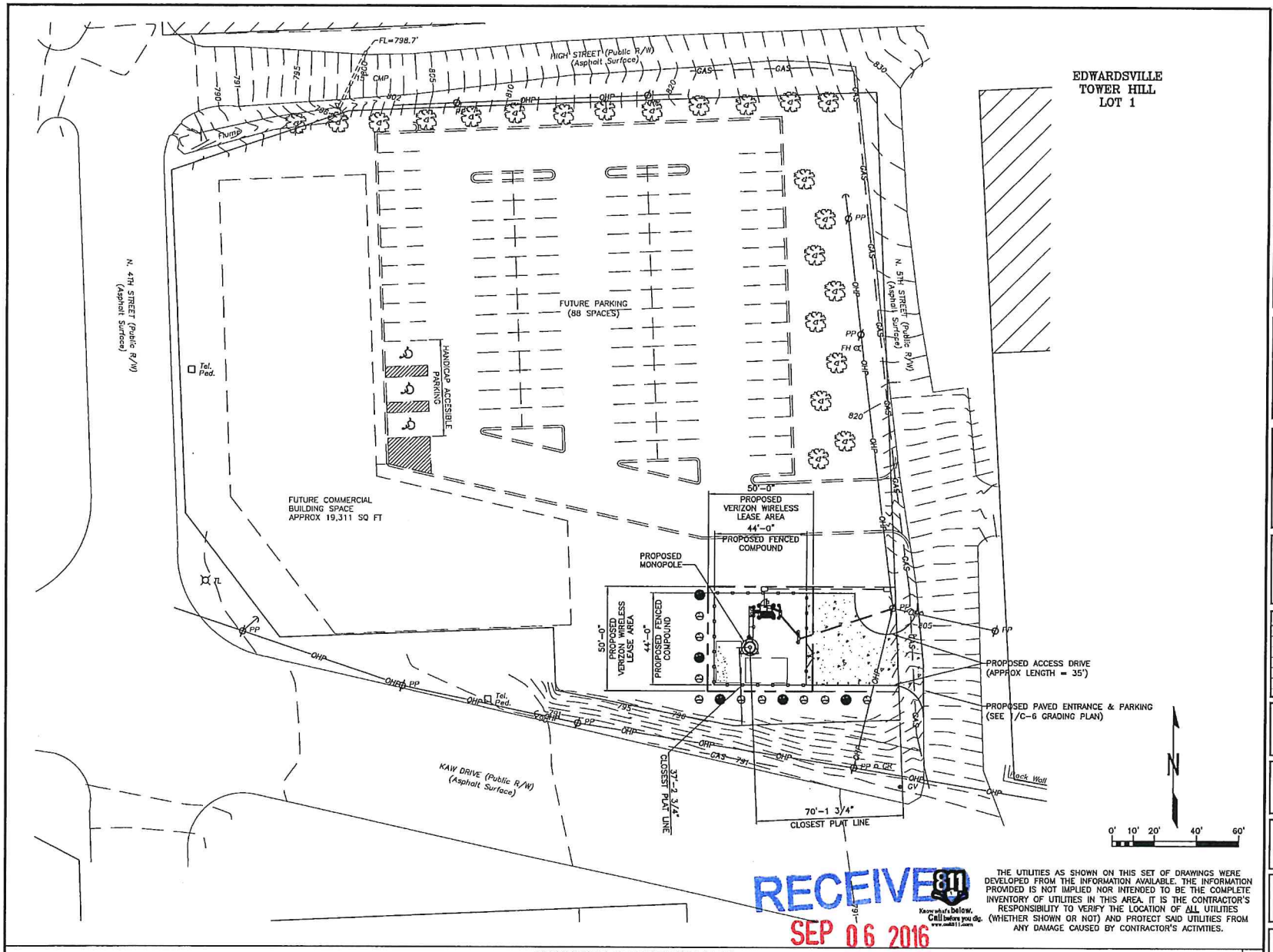

RECEIVED
SEP 06 2016

811 Know what's below. Call before you dig. www.call811.com

THE UTILITIES AS SHOWN ON THIS SET OF DRAWINGS WERE DEVELOPED FROM THE INFORMATION AVAILABLE. THE INFORMATION PROVIDED IS NOT IMPLIED NOR INTENDED TO BE THE COMPLETE INVENTORY OF UTILITIES IN THIS AREA. IT IS THE CONTRACTOR'S RESPONSIBILITY TO VERIFY THE LOCATION OF ALL UTILITIES (WHETHER SHOWN OR NOT) AND PROTECT SAID UTILITIES FROM ANY DAMAGE CAUSED BY CONTRACTOR'S ACTIVITIES.

PRELIMINARY DEVELOPMENT PLAN

1

PLANS PREPARED FOR:

verizon ✓

PLANS PREPARED BY:

SSC
9900 West 109th Street, Suite 300
Overland Park, Kansas 66210
Phone: 913-438-7700
Fax: 913-438-7777

ENGINEERING LICENSE:

STATE OF KANSAS

PE CERTIFICATE OF AUTHORIZATION #E-5[illegible]

ENGINEER:		PE #		
MLO	MICHAEL L. OWENS	[illegible]	STRUCTURAL/CIVIL	SC
KV	KEVIN VANHAC[illegible]	[illegible]	STRUCTURAL/CIVIL	SC
REJ	ROBERT E[illegible]	[illegible]0096	STRUCTURAL/CIVIL	SC
TMS	TER[illegible]	[illegible] 9250	ELECTRICAL	E
SDK	[illegible]	[illegible]ISLING 13654	ELECTRICAL	E

PRELIMINARY ISSUE

DRAWING NOTICE:

THIS DRAWING HAS NOT BEEN PUBLISHED AND IS THE SOLE PROPERTY OF SSC, INC. AND IS LENT TO THE BORROWER FOR THEIR CONFIDENTIAL USE ONLY, AND IN CONSIDERATION OF THE LOAN OF THIS DRAWING, THE BORROWER PROMISES AND AGREES TO RETURN IT UPON REQUEST AND AGREES THAT IT WILL NOT BE REPRODUCED, COPIED, LENT OR OTHERWISE DISPOSED OF DIRECTLY OR INDIRECTLY, NOR USED FOR ANY PURPOSE OTHER THAN FOR WHICH IT IS FURNISHED.

SUBMITTALS

DESCRIPTION	DATE	BY	REV
ISSUED FOR REVIEW	08/08/16	GAA	A
ISSUED FOR REVIEW	09/02/16	GAA	B

SITE NAME:

KCYC
EDWARDSVILLE

SITE NUMBER:

300431

SITE ADDRESS:

201 NORTH 4TH STREET
EDWARDSVILLE, KANSAS
66111

SHEET DESCRIPTION:

PRELIMINARY
DEVELOPMENT PLAN

SSC #:

SHEET NUMBER:

PDP-2

AREA MAP

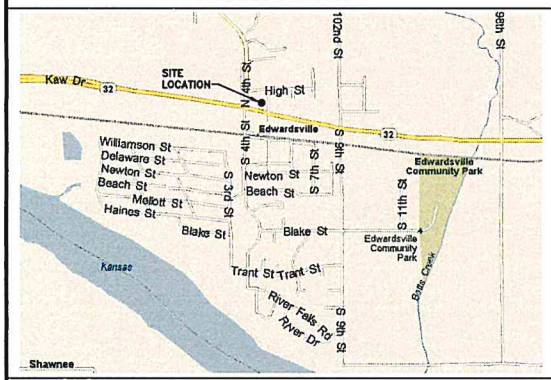

VICINITY MAP

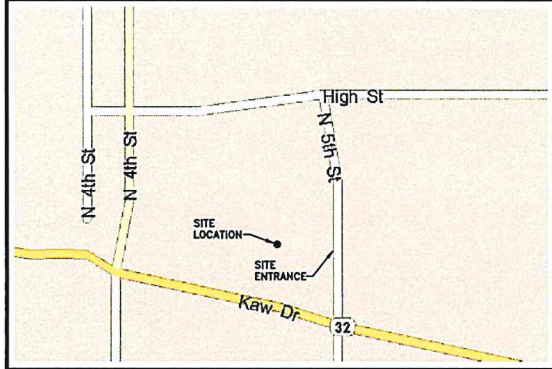

CONTRACTOR INFORMATION

POWER PROVIDER: WESTAR (800) 401-5666
CONTACT: MIKE TEMPLE (913) 667-5115

PROJECT INFORMATION

CELL SITE NAME: KCYC EDWARDSVILLE RAWLAND

CELL SITE ADDRESS: NORTH 5TH STREET
EDWARDSVILLE, KANSAS 66111

LESSOR: LOIS D. ROBERTS TRUST
16547 158TH STREET
BONNER SPRINGS, KANSAS 66012

CONTACT: LOIS D. ROBERTS KEVIN ROBERTS - SON
PHONE: (913) 238-9818 (913) 396-1880

STRUCTURE INFORMATION:
LATITUDE: 39° 03' 44.65" N (NAD 83)
LONGITUDE: 94° 49' 13.98" W (NAD 83)
GROUND ELEV: 803' AMSL
OVERALL STRUCTURE HT: 130'-0" AGL
STRUCTURE HT: 120'-0" AGL
ANTENNA CL: 120'-0" AGL

CONTACT: NETWORK REAL ESTATE MANAGER
(913) 344-2896 (VERIZON WIRELESS)

CONSULTING TEAM

ENGINEER: SSC, INC.
9900 WEST 109TH STREET, SUITE 300
OVERLAND PARK, KANSAS 66210
PHONE: (913) 438-7700
FAX: (913) 438-7777

K. VAN MAELE - LEAD ENGINEER

S.D. KEISLING - LEAD ELECTRICAL

K. VAN MAELE - PROJECT MANAGER

G.A. ARNOLD - LEAD DESIGNER

VERIZON WIRELESS DEPARTMENTAL APPROVALS

	INITIALS	DATE
HENRY MADDEN RF ENGINEER	HM	05/24/16
JOHN MUELLER TRANSPORT ENGINEER	JM	05/31/16
TONY LAROSE OPERATIONS MANAGER	TL	06/06/16
ANGELO R. TORRES CONSTRUCTION ENGINEER	ART	06/06/16
DERALD PRICE CONSTRUCTION MANAGER	KB	06/06/16
MARION S. CRABLE REAL ESTATE MANAGER	MSC	06/06/16

LESSOR/LICENSOR APPROVAL

	INITIALS	DATE
LESSOR/LICENSOR		

LESSOR/LICENSOR: PLEASE CHECK THE APPROPRIATE BOX BELOW

☐ NO CHANGES ☐ CHANGES NEEDED. SEE COMMENTS ON PLANS

DRAWING INDEX

SHEET NUMBER	SHEET DESCRIPTION	REVISION	RESPONSIBLE ENGINEER
T-1	TITLE SHEET	E	SC/E
	SURVEY		
C-1	OVERALL SITE PLAN	E	SC/E
C-1A	ENLARGED SITE PLAN	E	SC/E
C-2	FOUNDATION PLAN & DETAILS	E	SC
C-2A	FOUNDATION PLAN & DETAILS (ALT)	E	SC
C-3	PLATFORM PLAN & ELEVATIONS	E	SC
C-4	DETAILS (1 OF 2)	E	SC
C-5	DETAILS (2 OF 2)	E	SC
C-6	GRADING PLAN	E	SC
EQ-1	EQUIPMENT CABINETS	E	SC
EQ-2	EQUIPMENT CABINET DETAILS	E	SC
ANT-1	TOWER ELEVATION & ANTENNA INFORMATION	E	SC
ANT-2	RF DIAGRAM	E	SC
ANT-3	DETAILS (1 OF 3)	E	SC
ANT-4	DETAILS (2 OF 3)	E	SC
ANT-5	DETAILS (3 OF 3)	E	SC
E-1	ELECTRICAL - SITE PLAN	E	E
E-2	ELECTRICAL - RISER & ONE-LINE DIAGRAM	E	E
E-3	ELECTRICAL - METER RACK	E	E
E-4	ELECTRICAL - GROUNDING PLAN	E	E
E-5	ELECTRICAL - PLATFORM GROUNDING PLAN	E	E
E-6	ELECTRICAL - GROUNDING RISER	E	E
E-7	ELECTRICAL - DETAILS (1 OF 2)	E	E
E-8	ELECTRICAL - DETAILS (2 OF 2)	E	E
GN-1	GENERAL NOTES	E	SC/E
SP-1	SPECIFICATIONS (1 OF 8)	E	SC
SP-2	SPECIFICATIONS (2 OF 8)	E	SC
SP-3	SPECIFICATIONS (3 OF 8)	E	SC
SP-4	SPECIFICATIONS (4 OF 8)	E	SC
SP-5	SPECIFICATIONS (5 OF 8)	E	SC
SP-6	SPECIFICATIONS (6 OF 8)	E	SC
SP-7	SPECIFICATIONS (7 OF 8)	E	E
SP-8	SPECIFICATIONS (8 OF 8)	E	E

VERIZON WIRELESS PROJECT # 2014081618

PROJECT DESCRIPTION:
INSTALL COMMUNICATIONS EQUIPMENT
& TOWER FOR A COMMUNICATIONS SITE

verizon ✓

SITE NAME:
KCYC
EDWARDSVILLE

SITE NUMBER:
300431

RECEIVED
SEP 06 2016

PLANS PREPARED FOR:
verizon ✓

PLANS PREPARED BY:
9900 West 109th Street, Suite 300
Overland Park, Kansas 66210
Phone: 913-438-7700
Fax: 913-438-7777
SSC

ENGINEERING LICENSE:
STATE OF KANSAS
PE CERTIFICATE OF AUTHORIZATION #C-
ENGINEER: PE #-
MLO MICHAEL L. OWENS STRUCTURAL/CIVIL SC
KV KEVIN VANMAEL STRUCTURAL/CIVIL SC
REJ ROBERT E. STRUCTURAL/CIVIL SC
TMS TERRANCE M. 9250 ELECTRICAL E
SDK SHERWOOD D. KEISLING 13654 ELECTRICAL E
PRELIMINARY ISSUE

DRAWING NOTICE:
THIS DRAWING HAS NOT BEEN PUBLISHED AND IS THE SOLE PROPERTY OF SSC, INC. AND IS LENT TO THE BORROWER FOR THEIR CONFIDENTIAL USE ONLY, AND IN CONSIDERATION OF THE LOAN OF THIS DRAWING, THE BORROWER PROMISES AND AGREES TO RETURN IT UPON REQUEST AND AGREES THAT IT WILL NOT BE REPRODUCED, COPIED, LENT OR OTHERWISE DISPOSED OF DIRECTLY OR INDIRECTLY, NOR USED FOR ANY PURPOSE OTHER THAN FOR WHICH IT IS FURNISHED.

SUBMITTALS

DESCRIPTION	DATE	BY	REV
ISSUED FOR REVIEW	04/18/16	RKT	A
ISSUED FOR LESSOR REVIEW	06/06/16	RKT	B
PER CLIENT COMMENTS	06/23/16	RKT	C
PER CLIENT COMMENTS	08/08/16	RKT	D
ISSUED FOR REVIEW	09/06/16	GAA	E

SITE NAME:
KCYC
EDWARDSVILLE

SITE NUMBER:
300431

SITE ADDRESS:
NORTH FIFTH STREET
EDWARDSVILLE, KANSAS
66111

SHEET DESCRIPTION:
TITLE SHEET

SSC #: -

SHEET NUMBER: T-1

KCYC EDWARDSVILLE

PART OF THE SE 1/4, SECTION 26, T11S, R23E, IN WYANDOTTE COUNTY, KANSAS

PROPERTY DESCRIPTION: Parent Parcel as Provided

LOT 1, EDWARDSVILLE TOWER HILL, LOT 1, A SUBDIVISION IN THE CITY OF EDWARDSVILLE, WYANDOTTE COUNTY, KANSAS.

NOTE: The parent parcel graphically shown hereon, in full or in part, is the same as that described above.

Property information shown hereon was provided by First American Title Insurance Company, Commitment No. NCS-696883-KCTY, effective July 14, 2016 at 8:00 a.m..

Schedule B-II Information:

8. Easements, restrictions and setback lines as per plat, recorded in Plat Book 1, Page 12. (Shown)

12. Easement Agreement granted to the City of Edwardsville, Kansas in the document recorded in Book 4005, Page 212 of Official Records. (Shown)

13. Right of Way Easement granted to the Kansas State Highway Commission as set forth in the Condemnation proceeding in the District Court of Wyandotte County, Kansas in the document recorded as Case No. 18740-B of Official Records. (Shown)

14. Right of Way Easement granted to the Kansas State Highway Commission as set forth in the Condemnation proceeding in the District Court of Wyandotte County, Kansas in the document recorded as Case No. 20620-B of Official Records. (Shown)

15. NOTE: Pursuant to the County Tax Rolls for Wyandotte County, Kansas the alley between Lots 1 to 6 and Lots 8 to 12, Block 18, EDWARDSVILLE, has been vacated; however we do not find said document which vacates said alley.

Per Plat recorded in Plat Book 45, Page 23 the 18 foot North-South Alley shown within Block 18 shall be permanently vacated both as to use and as to title without further proceedings. (Shown)

18. Easements, restrictions and setback lines as per plat, recorded in Plat Bok 45, Page 23. (Shown)

Notes:

Bearings shown hereon are based on Kansas State Plane Coordinate System of 1983 (NAD 83).

Coordinates were derived using GPS Static Survey methods and post processed data with Magellan/Ashtech receivers and "Locus System" processor software.

The purpose of this survey is to establish and describe a Land Space and associated Right of Ways. This is not a boundary survey of the Parent Parcel.

** An utility locate was requested on 09-18-2014, as Ticket No. 14417112. The markings of said locate are shown hereon.

The utilities as shown on this drawing were developed from the information available (existing utility maps, aboveground observations and or surface markings placed on the ground by the utility company or a representative thereof). This company has made no attempt to excavate or go below surface to locate utilities and does not extend or imply a guaranty or warranty as to the exact location of or complete inventory of utilities in this area. It shall be the contractors responsibility to verify the location and depth of all utilities (whether shown or not) prior to excavation or construction and to protect said utilities from damage.

PROPERTY DESCRIPTION: LESSEE LAND SPACE (AS SURVEYED)

A 50 foot by 50 foot Lessee Land Space, situated in Lot 1 of EDWARDSVILLE TOWER HILL, LOT 1, and part of the Southeast Quarter of Section 26, Township 11 South, Range 23 East, in Wyandotte County, Kansas, more particularly described as follows:

COMMENCING at a the Southeast Corner of said Lot 1 (Found 1/2" Bar with Cap CSL-154); thence along the South line of said Lot 1, South 87°48'27" West, a distance of 41.74 feet; thence leaving said South line, North 00°00'00" West, a distance of 15.11 feet to the POINT OF BEGINNING; thence North 90°00'00" West, a distance of 50.00 feet; thence North 00°00'00" East, a distance of 50.00 feet; thence North 90°00'00" East, a distance of 50.00 feet; thence South 00°00'00" East, a distance of 50.00 feet to the POINT OF BEGINNING. Containing 2,500 square.

PROPERTY DESCRIPTION: LESSEE NON-EXCLUSIVE ACCESS/UTILITY RIGHT OF WAY (AS SURVEYED)

A 2,002 square foot Lessee Non-Exclusive Access/Utility Right of Way, situated in Lot 1 of EDWARDSVILLE TOWER HILL, LOT 1, and part of the Southeast Quarter of Section 26, Township 11 South, Range 23 East, in Wyandotte County, Kansas, more particularly described as follows:

COMMENCING at a the Southeast Corner of said Lot 1 (Found 1/2" Bar with Cap CSL-154); thence along the South line of said Lot 1, South 87°48'27" West, a distance of 41.74 feet; thence leaving said South line, North 00°00'00" West, a distance of 15.11 feet to the POINT OF BEGINNING; thence North 00°00'00" East, a distance of 50.00 feet; thence North 90°00'00" East, a distance of 38.94 feet to the West Right of Way line of N 5TH STREET (Public Right of Way) as now established; thence along said West Right of Way line, South 02°29'51" East, a distance of 50.05 feet; thence North 90°00'00" West, a distance of 41.12 feet to the POINT OF BEGINNING.

Certificate of Authority:
Missouri - 2002026538
Kansas - LS-154

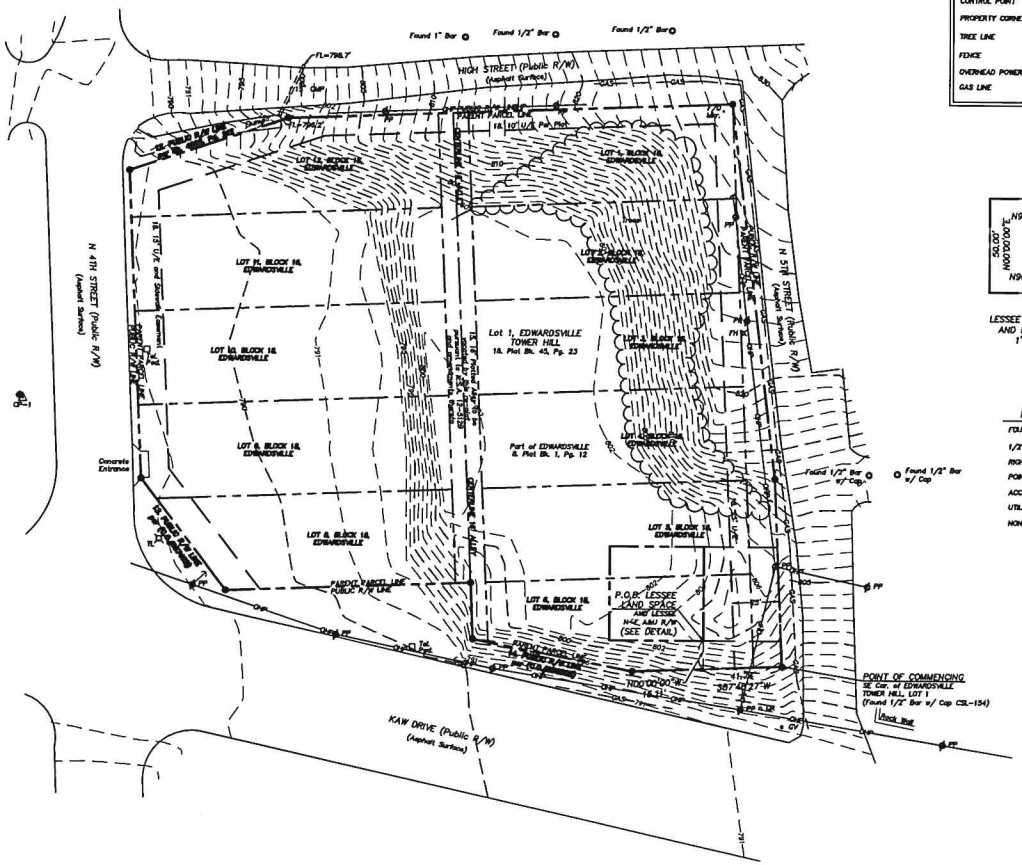

LEGEND

POWER POLE	PP
TRAFFIC LIGHT	TL
TELEPHONE PEDESTAL	Tel. Ped.
ANCHOR	
GAS REGULATOR	GR
GAS VALVE	GV
FIRE HYDRANT	FH
FIBER OPTIC MARKER	F/O Mkr.
BENCHMARK	
CONTROL POINT	
PROPERTY CORNER	
TREE LINE	
FENCE	X
OVERHEAD POWER LINE	OHP
GAS LINE	GAS

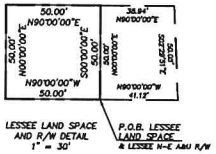

LESSEE LAND SPACE AND R/W DETAIL
1" = 30'

P.O.B. LESSEE LAND SPACE & LESSEE N-E ABU R/W

PROPERTY LEGEND

FOUND CORNER	
1/2" BAR WITH CAP CSL-154	
RIGHT OF WAY	R/W
POINT OF BEGINNING	P.O.B.
ACCESS/UTILITY	ABU
UTILITY EASEMENT	U/E
NON-EXCLUSIVE	N-E

CERTIFICATION:

I HEREBY CERTIFY THAT A SURVEY WAS MADE BY ME, OR UNDER MY DIRECT SUPERVISION, ON THE GROUND OF THE LAND SPACE, AND ASSOCIATED RIGHT OF WAY PREMISES HEREIN DESCRIBED, AND THE RESULTS OF SAID SURVEY ARE REPRESENTED HEREON TO THE BEST OF MY PROFESSIONAL KNOWLEDGE AND BELIEF.

JEFFREY B. LOVELACE KS-LS1326

DATE:

07-27-16: ADDED A/E
03-03-16: ADDED PROPERTY
11-05-15: ADDED LAYOUT

RECEIVED
SEP 06 2016

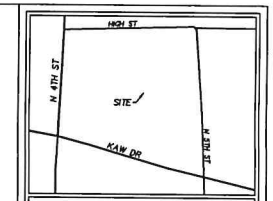

SSC
9900 W. 109th St., Suite 300
Overland Park, Kansas 66210
Phone: 913-438-7700
Fax: 913-438-7777

LOVELACE & ASSOCIATES
Land Surveying - Land Planning
Telecommunications Surveys
929 SE 3rd Street Lee's Summit, Missouri 64063
Phone: (816) 347-9997 Fax: (816) 347-9979

SURVEY COORDINATED BY:
LOVELACE AND ASSOCIATES, LLC
P.O. BOX 68,
LEE'S SUMMIT, MO 64063
TELEPHONE: 816-347-9997
FAX: 816-347-9979

SURVEY PROVIDED BY:
LOVELACE AND ASSOCIATES, LLC
P.O. BOX 68,
LEE'S SUMMIT, MO 64063
TELEPHONE: 816-347-9997
FAX: 816-347-9979

SURVEY PROVIDED FOR:
SSC
9900 W. 109TH STREET,
SUITE 300
OVERLAND PARK, KS 66210
TELEPHONE: 913-438-7700

SCALE 1" = 30'
30' 0 30' 60'

FLOOD NOTE:
According to my interpretations of Community Panel No. 20209C0120G of the Flood Insurance Rate Map for Wyandotte County, Kansas, dated 09-02-2011, the subject property is in Flood Zone "X", in "areas determined to be Outside 500 year flood plain".

KANSAS ONE-CALL SYSTEM, INC.
CALL BEFORE YOU DIG
800 - DIGS - DIGS
800-344-7233
(316) 942-0123
(316) 687-2753
KANSAS ONE CALL SYSTEM, INC.

SITE I.D.: NA
SITE NAME: KCYC EDWARDSVILLE
SITE LOCATION:
201 N 4TH ST,
EDWARDSVILLE, KS 66111
LA PROJECT NO.: 14402
DRAWN BY: A.C.T.
CHECKED BY: J.B.L.
DATE: 10-15-14
FIELDWORK DATE: 9-22-14

SHEET NUMBER
1 OF 1

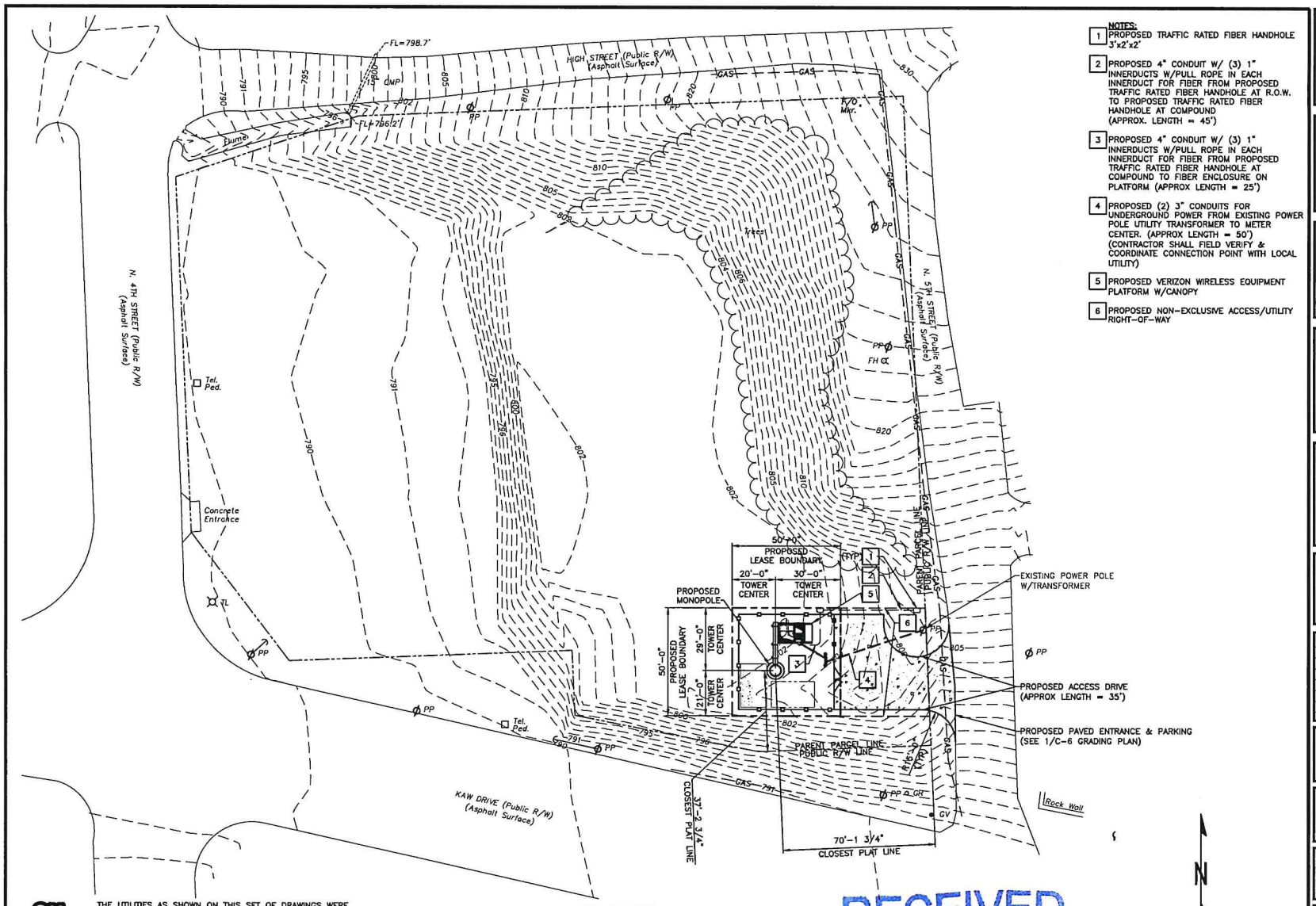

NOTES:

1. PROPOSED TRAFFIC RATED FIBER HANDHOLE 3'x2'x2'
2. PROPOSED 4" CONDUIT W/ (3) 1" INNERDUCTS W/PULL ROPE IN EACH INNERDUCT FOR FIBER FROM PROPOSED TRAFFIC RATED FIBER HANDHOLE AT R.O.W. TO PROPOSED TRAFFIC RATED FIBER HANDHOLE AT COMPOUND (APPROX. LENGTH = 45')
3. PROPOSED 4" CONDUIT W/ (3) 1" INNERDUCTS W/PULL ROPE IN EACH INNERDUCT FOR FIBER FROM PROPOSED TRAFFIC RATED FIBER HANDHOLE AT COMPOUND TO FIBER ENCLOSURE ON PLATFORM (APPROX LENGTH = 25')
4. PROPOSED (2) 3" CONDUITS FOR UNDERGROUND POWER FROM EXISTING POWER POLE UTILITY TRANSFORMER TO METER CENTER. (APPROX LENGTH = 50') (CONTRACTOR SHALL FIELD VERIFY & COORDINATE CONNECTION POINT WITH LOCAL UTILITY)
5. PROPOSED VERIZON WIRELESS EQUIPMENT PLATFORM W/CANOPY
6. PROPOSED NON-EXCLUSIVE ACCESS/UTILITY RIGHT-OF-WAY

811 Know what's below. Call before you dig. www.call811.com

THE UTILITIES AS SHOWN ON THIS SET OF DRAWINGS WERE DEVELOPED FROM THE INFORMATION AVAILABLE. THE INFORMATION PROVIDED IS NOT IMPLIED NOR INTENDED TO BE THE COMPLETE INVENTORY OF UTILITIES IN THIS AREA. IT IS THE CONTRACTOR'S RESPONSIBILITY TO VERIFY THE LOCATION OF ALL UTILITIES (WHETHER SHOWN OR NOT) AND PROTECT SAID UTILITIES FROM ANY DAMAGE CAUSED BY CONTRACTOR'S ACTIVITIES.

NOTE:
EQUIPMENT PLATFORM AND CANOPY DESIGNED AND MANUFACTURED BY OTHERS

RECEIVED
SEP 06 2016

OVERALL SITE PLAN

1

PLANS PREPARED FOR:

verizon ✓

PLANS PREPARED BY:

9900 West 109th Street, Suite 300
Overland Park, Kansas 66210
Phone: 913-438-7700
Fax: 913-438-7777
SSC

ENGINEERING LICENSE:

STATE OF KANSAS
PE CERTIFICATE OF AUTHORIZATION #E-
ENGINEER: PE #:
MLO MICHAEL L. OWENS STRUCTURAL/CIVIL SC
KV KEVIN VANMAELE STRUCTURAL/CIVIL SC
REJ ROBERT E. STRUCTURAL/CIVIL SC
TMS TERRANCE 9250 ELECTRICAL E
SDK SUSLING 3654 ELECTRICAL E

PRELIMINARY ISSUE

DRAWING NOTICE:

THIS DRAWING HAS NOT BEEN PUBLISHED AND IS THE SOLE PROPERTY OF SSC, INC. AND IS LENT TO THE BORROWER FOR THEIR CONFIDENTIAL USE ONLY, AND IN CONSIDERATION OF THE LOAN OF THIS DRAWING, THE BORROWER PROMISES AND AGREES TO RETURN IT UPON REQUEST AND AGREES THAT IT WILL NOT BE REPRODUCED, COPIED, LENT OR OTHERWISE DISPOSED OF DIRECTLY OR INDIRECTLY, NOR USED FOR ANY PURPOSE OTHER THAN FOR WHICH IT IS FURNISHED.

SUBMITTALS

DESCRIPTION	DATE	BY	REV
ISSUED FOR REVIEW	04/18/16	RKT	A
ISSUED FOR LESSOR REVIEW	06/06/16	RKT	B
PER CLIENT COMMENTS	06/23/16	RKT	C
PER CLIENT COMMENTS	08/08/16	RKT	D
ISSUED FOR REVIEW	09/06/16	GAA	E

SITE NAME:

KCYC
EDWARDSVILLE

SITE NUMBER:

300431

SITE ADDRESS:

NORTH FIFTH STREET
EDWARDSVILLE, KANSAS
66111

SHEET DESCRIPTION:

OVERALL
SITE PLAN

SSC #: -

SHEET NUMBER:

C-1

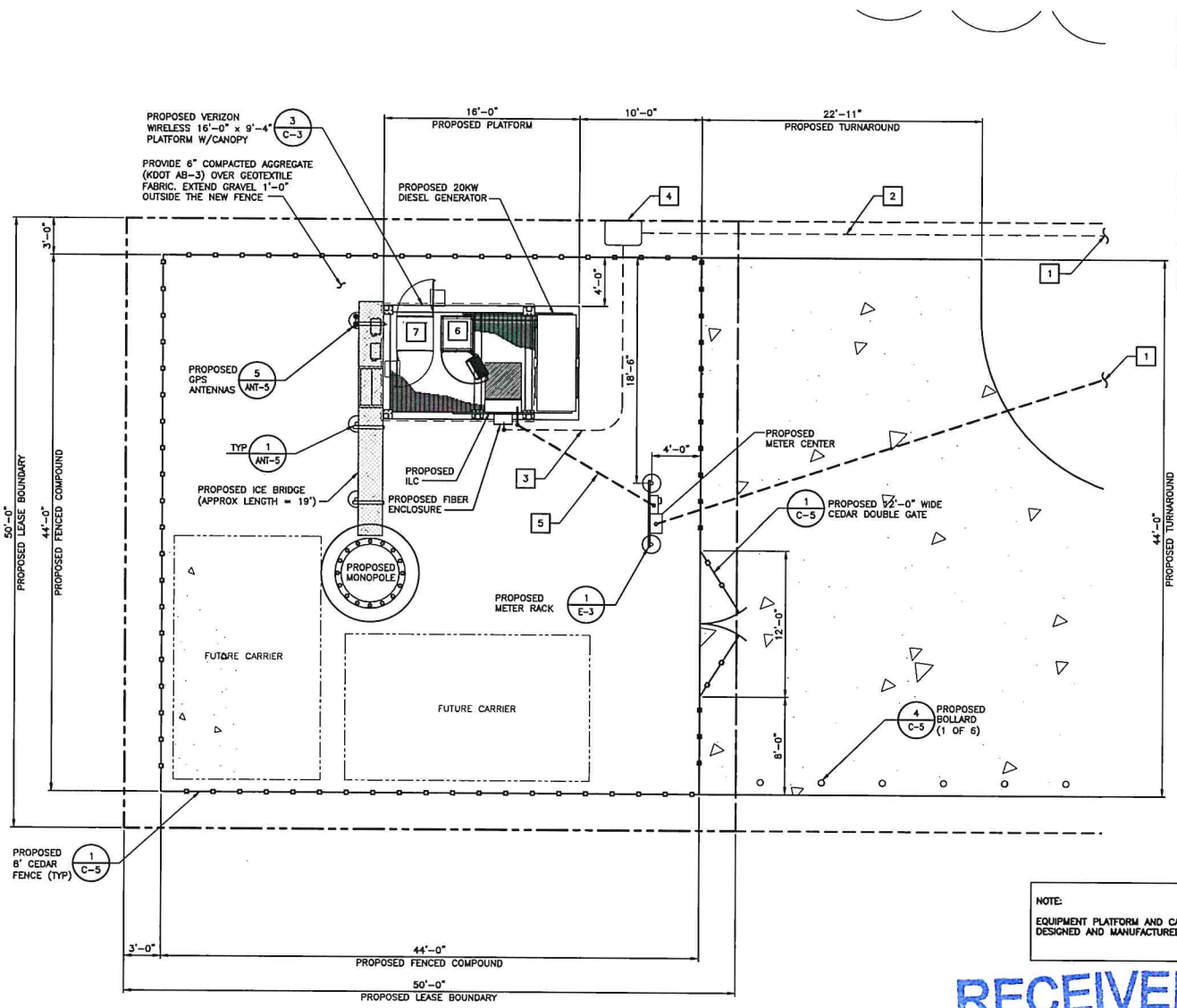

NOTE:

1. FOR SIZES, LENGTH & CONTINUATION OF UTILITIES, SEE 1/C-1.
2. PROPOSED 4" CONDUIT W/ (3) 1" INNERDUCTS W/PULL ROPE IN EACH INNERDUCT FOR FIBER FROM PROPOSED TRAFFIC RATED FIBER HANDHOLE AT R.O.W. TO PROPOSED TRAFFIC RATED FIBER HANDHOLE AT COMPOUND. (APPROX LENGTH = 45')
3. PROPOSED 4" CONDUIT W/ (3) 1" INNERDUCTS W/PULL ROPE IN EACH INNERDUCT FOR FIBER FROM PROPOSED TRAFFIC RATED FIBER HANDHOLE AT COMPOUND TO FIBER ENCLOSURE ON PLATFORM. (APPROX LENGTH = 25')
4. PROPOSED FIBER HANDHOLE 3'x2'x2' (TYP)
5. PROPOSED 3" CONDUIT FOR POWER FROM METER CENTER TO ILC ON PLATFORM. (APPROX LENGTH = 15')
6. PROPOSED VERIZON WIRELESS POWER CABINET
7. PROPOSED VERIZON WIRELESS EQUIPMENT CABINET

NOTE:

EQUIPMENT PLATFORM AND CANOPY DESIGNED AND MANUFACTURED BY OTHERS

RECEIVED
SEP 06 2016

ENLARGED SITE PLAN

1

PLANS PREPARED FOR:

verizon ✓

PLANS PREPARED BY:

9900 West 109th Street, Suite 300
Overland Park, Kansas 66210
Phone: 913-438-7700
Fax: 913-438-7777
SSC

ENGINEERING LICENSE:

STATE OF KANSAS
PE CERTIFICATE OF AUTHORIZATION #C-
ENGINEER: PE #

MJO	MICHAEL L. OWENS	STRUCTURAL/CIVIL	SC
KV	KEVIN VANMAELE	STRUCTURAL/CIVIL	SC
REJ	ROBERT E.	STRUCTURAL/CIVIL	SC
TMS	TERRA	ELECTRICAL	E
SDK	SU	ELECTRICAL	E

PRELIMINARY ISSUE

DRAWING NOTICE:

THIS DRAWING HAS NOT BEEN PUBLISHED AND IS THE SOLE PROPERTY OF SSC, INC. AND IS LENT TO THE BORROWER FOR THEIR CONFIDENTIAL USE ONLY, AND IN CONSIDERATION OF THE LOAN OF THIS DRAWING THE BORROWER PROMISES AND AGREES TO RETURN IT UPON REQUEST AND AGREES THAT IT WILL NOT BE REPRODUCED, COPIED, LENT OR OTHERWISE DISPOSED OF DIRECTLY OR INDIRECTLY, NOR USED FOR ANY PURPOSE OTHER THAN FOR WHICH IT IS FURNISHED.

SUBMITTALS

DESCRIPTION	DATE	BY	REV
ISSUED FOR REVIEW	04/18/16	RKT	A
ISSUED FOR LESSOR REVIEW	06/06/16	RKT	B
PER CLIENT COMMENTS	06/23/16	RKT	C
PER CLIENT COMMENTS	08/08/16	RKT	D
ISSUED FOR REVIEW	09/06/16	GAA	E

SITE NAME:

KCYC
EDWARDSVILLE

SITE NUMBER:

300431

SITE ADDRESS:

NORTH FIFTH STREET
EDWARDSVILLE, KANSAS
66111

SHEET DESCRIPTION:

ENLARGED
SITE PLAN

SSC #: -

SHEET NUMBER: C-1A

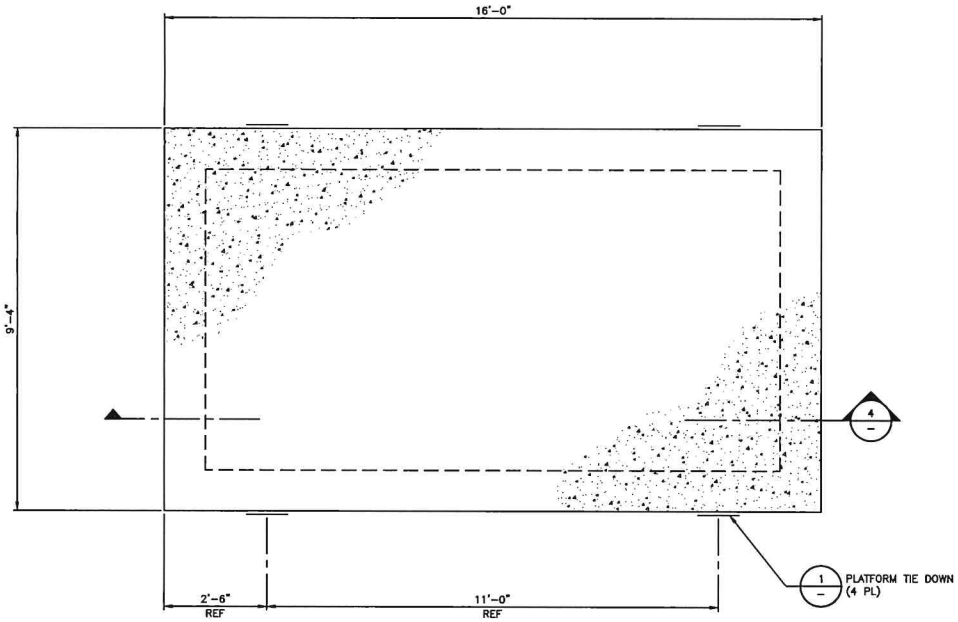

PLATFORM FOUNDATION PLAN | 3

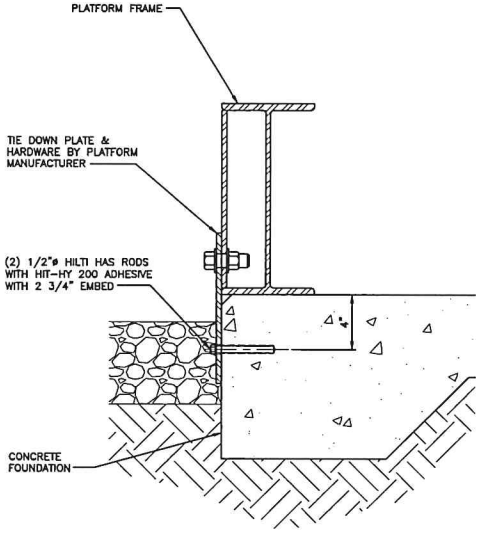

TIE DOWN DETAIL | 1

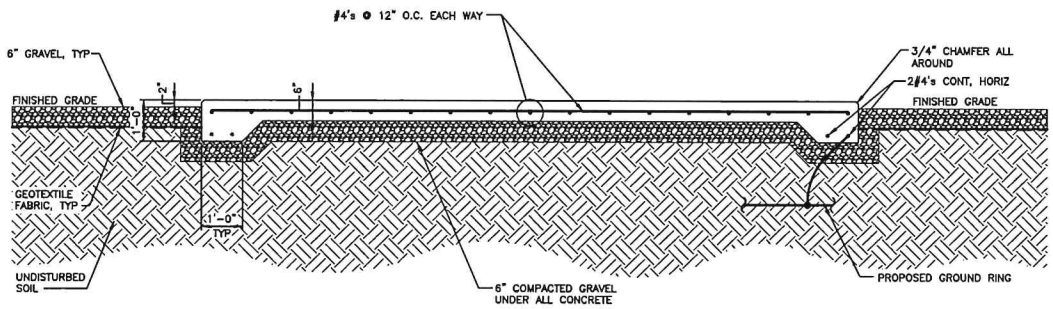

NOTE: CONCRETE FINISH TO BE CLASS A TOLERANCE

PLATFORM FOUNDATION SECTION | 4

RECEIVED
SEP 06 2016

DETAIL NOT USED | 2

PLANS PREPARED FOR:

verizon ✓

PLANS PREPARED BY:

9900 West 109th Street, Suite 300
Overland Park, Kansas 66210
Phone: 913-438-7700
Fax: 913-438-7777
SSC

ENGINEERING LICENSE:

STATE OF KANSAS
PE CERTIFICATE OF AUTHORIZATION #E-
ENGINEER: PE #:
MLO MICHAEL L. OWENS STRUCTURAL/CIVIL SC
KV KEVIN VANMAELE STRUCTURAL/CIVIL SC
REJ ROBERT E. STRUCTURAL/CIVIL SC
TMS TERRANCE 9250 ELECTRICAL E
SDK SUSLING 3654 ELECTRICAL E

PRELIMINARY ISSUE

DRAWING NOTICE:

THIS DRAWING HAS NOT BEEN PUBLISHED AND IS THE SOLE PROPERTY OF SSC, INC. AND IS LENT TO THE BORROWER FOR THEIR CONFIDENTIAL USE ONLY, AND IN CONSIDERATION OF THE LOAN OF THIS DRAWING, THE BORROWER PROMISES AND AGREES TO RETURN IT UPON REQUEST AND AGREES THAT IT WILL NOT BE REPRODUCED, COPIED, LENT OR OTHERWISE DISPOSED OF DIRECTLY OR INDIRECTLY, NOR USED FOR ANY PURPOSE OTHER THAN FOR WHICH IT IS FURNISHED.

SUBMITTALS

DESCRIPTION	DATE	BY	REV
ISSUED FOR REVIEW	04/16/16	RKT	A
ISSUED FOR LESSOR REVIEW	06/06/16	RKT	B
PER CLIENT COMMENTS	06/23/16	RKT	C
PER CLIENT COMMENTS	08/08/16	RKT	D
ISSUED FOR REVIEW	09/06/16	GAA	E

SITE NAME:

KCYC
EDWARDSVILLE

SITE NUMBER:

300431

SITE ADDRESS:

NORTH FIFTH STREET
EDWARDSVILLE, KANSAS
66111

SHEET DESCRIPTION:

FOUNDATION
PLAN & DETAILS

SSC #: -

SHEET NUMBER: C-2

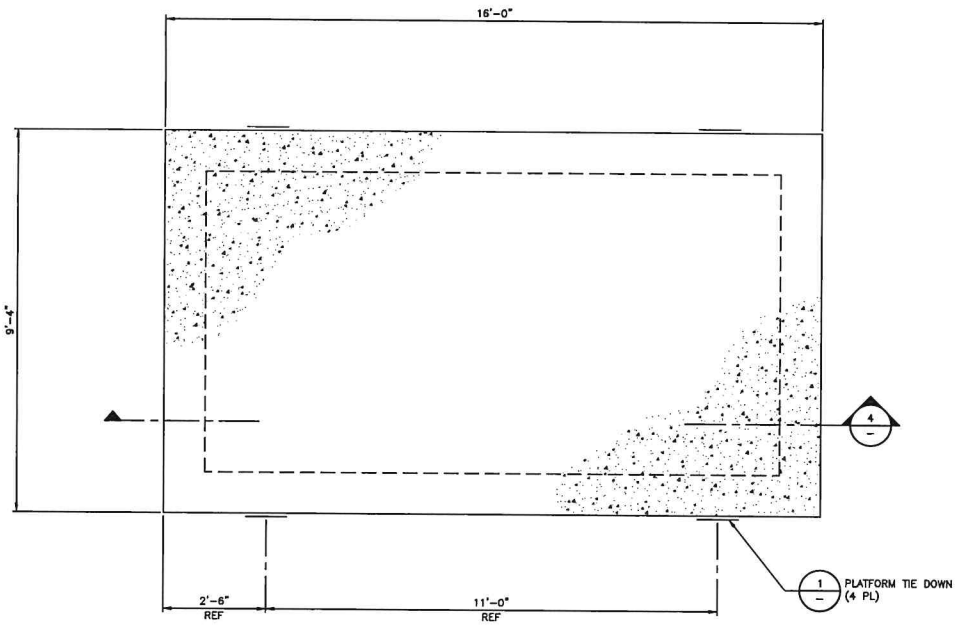

PLATFORM FOUNDATION PLAN | 3

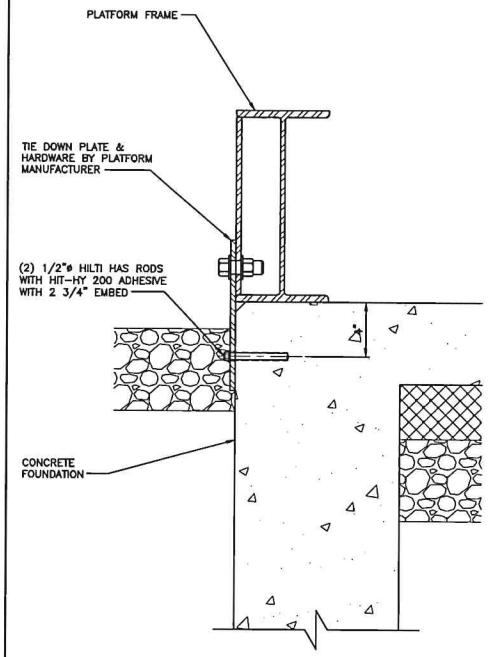

TIE DOWN DETAIL | 1

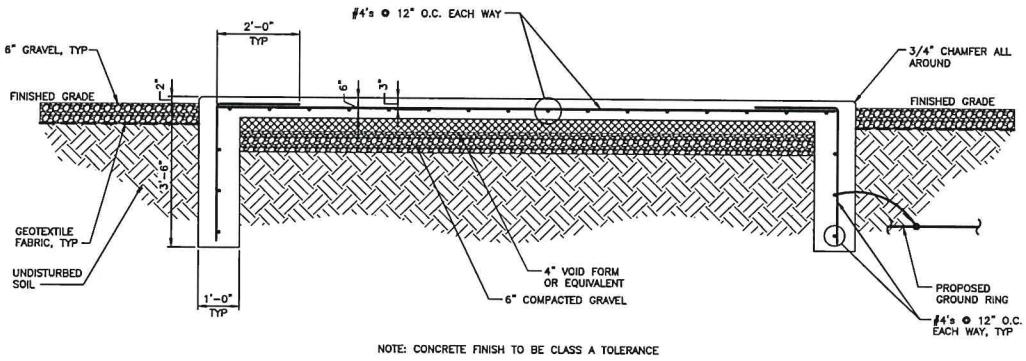

NOTE: CONCRETE FINISH TO BE CLASS A TOLERANCE

PLATFORM FOUNDATION SECTION | 4

RECEIVED
SEP 06 2016

DETAIL NOT USED | 2

PLANS PREPARED FOR:

verizon ✓

PLANS PREPARED BY:

9900 West 109th Street, Suite 300
Overland Park, Kansas 66210
Phone: 913-438-7700
Fax: 913-438-7777
SSC

ENGINEERING LICENSE:

STATE OF KANSAS
PE CERTIFICATE OF AUTHORIZATION #E-
ENGINEER: PE #
MLO MICHAEL L. OWENS STRUCTURAL/CIVIL SC
KV KEVIN VANMAELE STRUCTURAL/CIVIL SC
REJ ROBERT E. 6996 STRUCTURAL/CIVIL SC
TMS TERRA 9250 ELECTRICAL E
SDK SU ESLING 3454 ELECTRICAL E

PRELIMINARY ISSUE

DRAWING NOTICE:

THIS DRAWING HAS NOT BEEN PUBLISHED AND IS THE SOLE PROPERTY OF SSC, INC. AND IS LENT TO THE BORROWER FOR THEIR CONFIDENTIAL USE ONLY, AND IN CONSIDERATION OF THE LOAN OF THIS DRAWING, THE BORROWER PROMISES AND AGREES TO RETURN IT UPON REQUEST AND AGREES THAT IT WILL NOT BE REPRODUCED, COPIED, LENT OR OTHERWISE DISPOSED OF DIRECTLY OR INDIRECTLY, NOR USED FOR ANY PURPOSE OTHER THAN FOR WHICH IT IS FURNISHED.

SUBMITTALS

DESCRIPTION	DATE	BY	REV
ISSUED FOR REVIEW	04/18/16	RKT	A
ISSUED FOR LESSOR REVIEW	06/06/16	RKT	B
PER CLIENT COMMENTS	06/23/16	RKT	C
PER CLIENT COMMENTS	08/08/16	RKT	D
ISSUED FOR REVIEW	09/06/16	GAA	E

SITE NAME:

KCYC
EDWARDSVILLE

SITE NUMBER:

300431

SITE ADDRESS:

NORTH FIFTH STREET
EDWARDSVILLE, KANSAS
66111

SHEET DESCRIPTION:

FOUNDATION
PLAN & DETAILS (ALT)

SSC #: -

SHEET NUMBER: C-2A

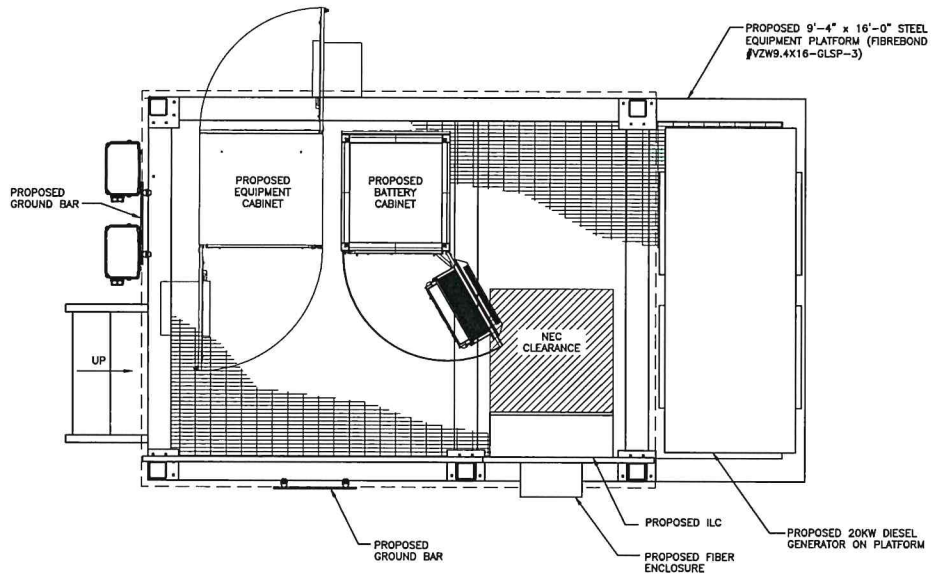

PLATFORM PLAN | 3

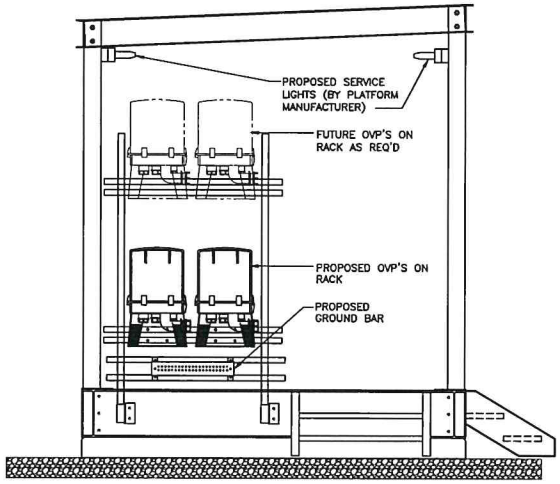

PLATFORM – LEFT SIDE ELEVATION | 1

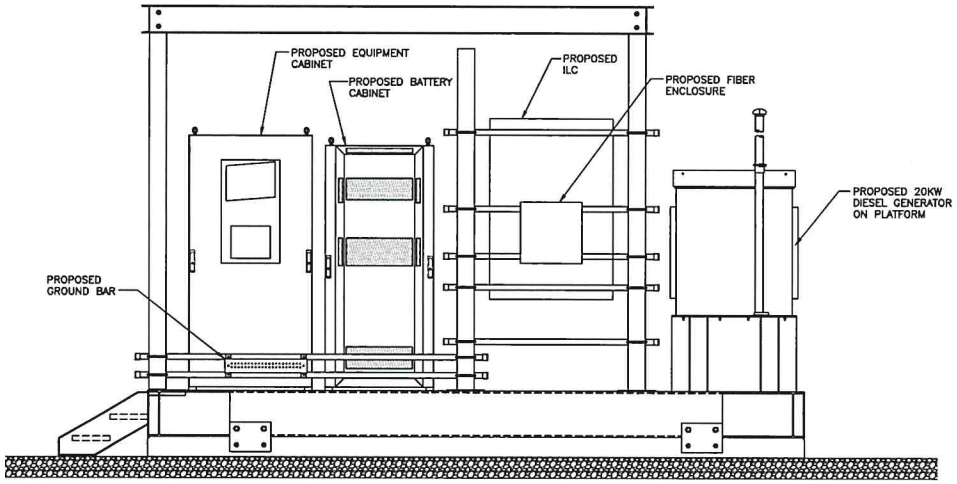

PLATFORM – FRONT ELEVATION | 4

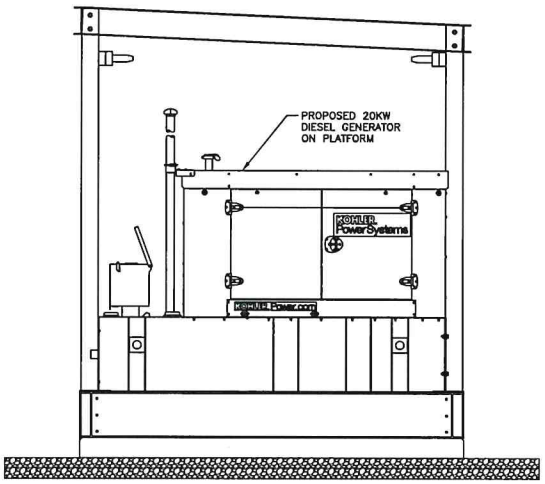

PLATFORM – RIGHT SIDE ELEVATION | 2

RECEIVED
SEP 06 2016

PLANS PREPARED FOR:

verizon ✓

PLANS PREPARED BY:

9900 West 109th Street, Suite 300
Overland Park, Kansas 66210
Phone: 913-438-7700
Fax: 913-438-7777
SSC

ENGINEERING LICENSE:

STATE OF KANSAS
PE CERTIFICATE OF AUTHORIZATION #E-
ENGINEER: PE #-

MLO	MICHAEL L. OWENS		STRUCTURAL/CIVIL	SC
KV	KEVIN VANHAELE		STRUCTURAL/CIVIL	SC
REJ	ROBERT E.	9996	STRUCTURAL/CIVIL	SC
TMS	TERRANCE	9250	ELECTRICAL	E
SDK	SU	SLING 3654	ELECTRICAL	E

PRELIMINARY ISSUE

DRAWING NOTICE:

THIS DRAWING HAS NOT BEEN PUBLISHED AND IS THE SOLE PROPERTY OF SSC, INC. AND IS LENT TO THE BORROWER FOR THEIR CONFIDENTIAL USE ONLY. AND IN CONSIDERATION OF THE LOAN OF THIS DRAWING THE BORROWER PROMISES AND AGREES TO RETURN IT UPON REQUEST AND AGREES THAT IT WILL NOT BE REPRODUCED, COPIED, LENT OR OTHERWISE DISPOSED OF DIRECTLY OR INDIRECTLY, NOR USED FOR ANY PURPOSE OTHER THAN FOR WHICH IT IS FURNISHED.

SUBMITTALS:

DESCRIPTION	DATE	BY	REV
ISSUED FOR REVIEW	04/18/16	RKT	A
ISSUED FOR LESSOR REVIEW	06/06/16	RKT	B
PER CLIENT COMMENTS	06/23/16	RKT	C
PER CLIENT COMMENTS	08/08/16	RKT	D
ISSUED FOR REVIEW	09/06/16	GAA	E

SITE NAME:

KCYC
EDWARDSVILLE

SITE NUMBER:

300431

SITE ADDRESS:

NORTH FIFTH STREET
EDWARDSVILLE, KANSAS
66111

SHEET DESCRIPTION:

PLATFORM PLAN
& ELEVATIONS

SSC #: -

SHEET NUMBER: C-3

DETAIL NOT USED | 3

DETAIL NOT USED | 1

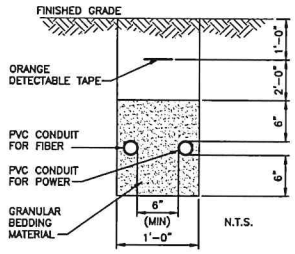

NOTES:

1. COMMUNICATION AND POWER CONDUITS MAY BE RUN IN SEPARATE TRENCHES. CONDUITS SHALL MAINTAIN 6 INCHES MINIMUM SEPARATION.
2. SEE SITE PLANS FOR EXACT SIZE AND QUANTITY OF CONDUITS.

TYPICAL CONDUIT TRENCH | 5

DETAIL NOT USED | 4

FOUNDATION GENERAL NOTES:

1. THE SITE SHALL BE STRIPPED OF ALL VEGETATION PRIOR TO FILL OR CONSTRUCTION OF THE FOUNDATION PAD.
2. ALL FILL SAND SHALL BE 0–15 P.I. WITH A COMPACTION TEST RUN ON EACH 6" LIFT – COMPACTED TO 90% MODIFIED PROCTOR.
3. ANY SOFT AREAS (TREE STUMP HOLES, ETC.) SHALL BE CUT OUT AND RECOMPACTED TO SAID PROCTOR.
4. THE CONTRACTOR SHALL KEEP THE SITE SO IT WILL HAVE POSITIVE DRAINAGE AT ALL TIMES.
5. ALL EXCAVATIONS SHALL BE FREE OF WATER BEFORE POURING CONCRETE.
6. MINIMUM SOIL BEARING CAPACITY OF 2,000 PSF IN ALL FOUNDATION AND SLAB AREAS.

REINFORCING STEEL:

1. ALL STEEL BARS SHALL BE GRADE 60 STEEL.
2. CLEAR DIMENSIONS FOR STEEL: STEEL AGAINST EARTH SHALL BE 3". STEEL AGAINST FORM SHALL BE 1–1/2"
3. ALL STEEL BAR SPLICES SHALL BE 36 TIMES BAR DIAMETER.
4. ALL CORNER AND INTERSECTIONS SHALL HAVE CORNER BARS (TOP AND BOTTOM) INSTALLED.
5. ALL WIRE AND BARS SHALL BE SECURED PROPERLY BEFORE POURING CONCRETE.

CONCRETE:

1. ALL CONCRETE SHALL BE 6 SACK MIX AND HAVE A MINIMUM OF 4000 PSI COMPRESSIVE STRENGTH AT 28 DAYS.
2. EDGE TROWEL ALL EXPOSED CONCRETE EDGES.
3. MAXIMUM SLUMP SHALL BE 4".

STRUCTURAL NOTES | 2

RECEIVED
SEP 06 2016

PLANS PREPARED FOR:

verizon ✓

PLANS PREPARED BY:

9900 West 109th Street, Suite 300
Overland Park, Kansas 66210
Phone: 913-438-7700
Fax: 913-438-7777
SSC

ENGINEERING LICENSE:

STATE OF KANSAS
PE CERTIFICATE OF AUTHORIZATION #E-[illegible]
ENGINEER: PE #[illegible]

MLO	MICHAEL L. OWENS	[illegible]	STRUCTURAL/CIVIL	SC
KV	KEVIN VANMAEL[illegible]	[illegible]	STRUCTURAL/CIVIL	SC
RSJ	ROBERT [illegible]	[illegible]96	STRUCTURAL/CIVIL	SC
TMS	TERRA[illegible]	[illegible] 9250	ELECTRICAL	E
SDK	S[illegible]	[illegible]ESLING 3654	ELECTRICAL	E

PRELIMINARY ISSUE

DRAWING NOTICE:

THIS DRAWING HAS NOT BEEN PUBLISHED AND IS THE SOLE PROPERTY OF SSC, INC. AND IS LENT TO THE BORROWER FOR THEIR CONFIDENTIAL USE ONLY, AND IN CONSIDERATION OF THE LOAN OF THIS DRAWING, THE BORROWER PROMISES AND AGREES TO RETURN IT UPON REQUEST AND AGREES THAT IT WILL NOT BE REPRODUCED, COPIED, LENT OR OTHERWISE DISPOSED OF DIRECTLY OR INDIRECTLY, NOR USED FOR ANY PURPOSE OTHER THAN FOR WHICH IT IS FURNISHED.

SUBMITTALS

DESCRIPTION	DATE	BY	REV
ISSUED FOR REVIEW	04/18/16	RKT	A
ISSUED FOR LESSOR REVIEW	06/06/16	RKT	B
PER CLIENT COMMENTS	06/23/16	RKT	C
PER CLIENT COMMENTS	08/08/16	RKT	D
ISSUED FOR REVIEW	09/06/16	CAA	E

SITE NAME:

KCYC
EDWARDSVILLE

SITE NUMBER:

300431

SITE ADDRESS:

NORTH FIFTH STREET
EDWARDSVILLE, KANSAS
66111

SHEET DESCRIPTION:

DETAILS
(1 OF 2)

SSC #: -

SHEET NUMBER: C-4

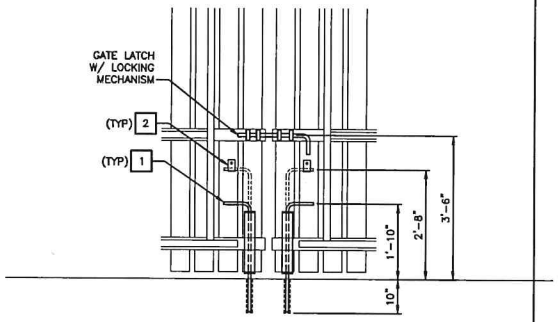

1 CANE BOLT: 1/2 X 40" LONG A325 W/1" DIA STD PIPE SLEEVE 10" LONG SET IN CONCRETE

2 UPPER HOOK OF 16 GA GALV. SHEET METAL. PAINTED (TYP) THRU-BOLT GATE

GATE LATCH MECHANISM | 3

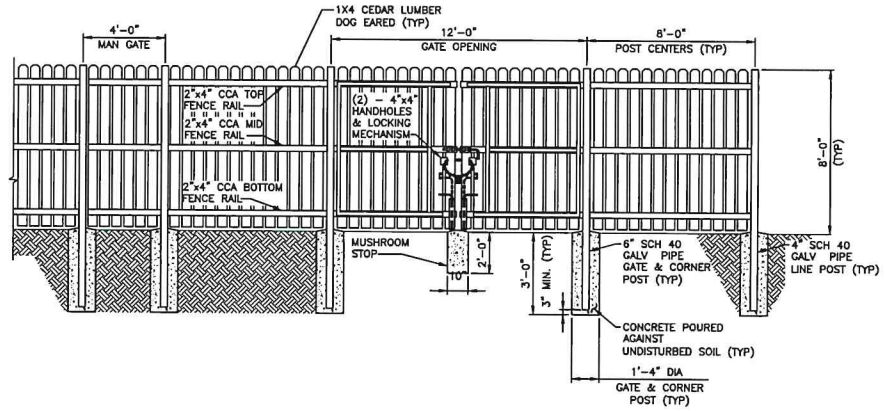

FENCE/GATE DETAIL | 1

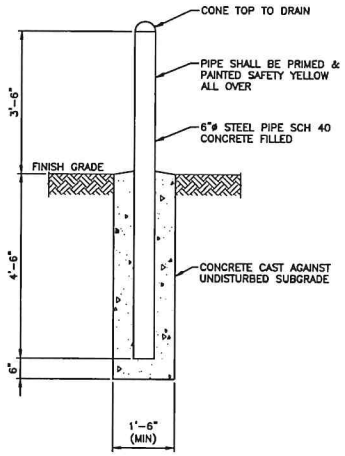

CONCRETE FILLED BOLLARD | 4

DETAIL NOT USED | 2

RECEIVED
SEP 06 2016

PLANS PREPARED FOR:

verizon ✓

PLANS PREPARED BY:

9900 West 109th Street, Suite 300
Overland Park, Kansas 66210
Phone: 913-438-7700
Fax: 913-438-7777
SSC

ENGINEERING LICENSE:

STATE OF KANSAS
PE CERTIFICATE OF AUTHORIZATION #E-
ENGINEER: PE #

MLO	MICHAEL L. OWENS	STRUCTURAL/CIVIL	SC
KV	KEVIN VANMAELE	STRUCTURAL/CIVIL	SC
REJ	ROBERT E.	STRUCTURAL/CIVIL	SC
TMS	TERRA	ELECTRICAL	E
SDK	SU	ELECTRICAL	E

PRELIMINARY ISSUE

DRAWING NOTICE:

THIS DRAWING HAS NOT BEEN PUBLISHED AND IS THE SOLE PROPERTY OF SSC, INC. AND IS LENT TO THE BORROWER FOR THEIR CONFIDENTIAL USE ONLY, AND IN CONSIDERATION OF THE LOAN OF THIS DRAWING, THE BORROWER PROMISES AND AGREES TO RETURN IT UPON REQUEST AND AGREES THAT IT WILL NOT BE REPRODUCED, COPIED, LENT OR OTHERWISE DISPOSED OF DIRECTLY OR INDIRECTLY, NOR USED FOR ANY PURPOSE OTHER THAN FOR WHICH IT IS FURNISHED.

SUBMITTALS

DESCRIPTION	DATE	BY	REV
ISSUED FOR REVIEW	04/18/16	RKT	A
ISSUED FOR LESSOR REVIEW	06/06/16	RKT	B
PER CLIENT COMMENTS	06/23/16	RKT	C
PER CLIENT COMMENTS	08/08/16	RKT	D
ISSUED FOR REVIEW	09/06/16	GAA	E

SITE NAME:

KCYC
EDWARDSVILLE

SITE NUMBER:

300431

SITE ADDRESS:

NORTH FIFTH STREET
EDWARDSVILLE, KANSAS
66111

SHEET DESCRIPTION:

DETAILS
(2 OF 2)

SSC #: -

SHEET NUMBER: C-5

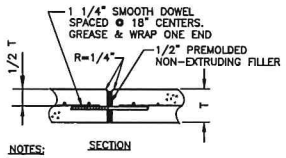

NOTES:
1. TYPICAL SLAB REINFORCEMENT SHALL BE INTERRUPTED @ JOINTS.
2. SMOOTH DOWELS SHALL BE 18" LONG.

CONSTRUCTION JOINT DETAIL
NO SCALE

NOTE:
EXPANSION JOINTS SHALL BE PLACED WHERE DOWEL BARS ARE NOT REQUIRED BY THE ENGINEER.

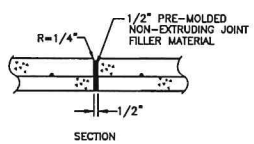

EXPANSION JOINT DETAIL
NO SCALE

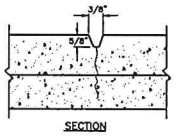

CONTROL JOINT DETAIL
NO SCALE

GRADING NOTES:
1. STRIP THE GROUND OF ALL VEGETATION AND DEBRIS.
2. PROOF ROLL WITH LOADED TANDEM TO IDENTIFY SOFT SPOTS.
3. REMOVE SOFT SPOT MATERIAL AND COMPACT TO 95% AT STRUCTURE AND CONCRETE SURFACING, 90% ELSEWHERE.
4. INSTALL GEOTEXTILE FABRIC ON PREPARED SUBGRADE.
5. PLACE AND COMPACT 6" AGGREGATE SURFACING.
6. SEE SPECIFICATIONS DRAWINGS FOR REQUIREMENTS OF BACKFILL MATERIAL.
7. MAINTAIN REASONABLE DUST CONTROL METHODS DURING CONSTRUCTION.
8. ENTIRE DRIVE LENGTH SHALL BE POSITIVE DRAINING DURING, AND AT COMPLETION OF CONSTRUCTION.
9. CONTRACTOR SHALL OBTAIN ANY SITE SPECIFIC SOILS REPORTS AND FOLLOW ALL RECOMMENDATIONS. A DISCREPANCY BETWEEN CONSTRUCTION DRAWINGS AND SOILS REPORT, THE GEOTECHNICAL REPORT SHALL GOVERN. SSC TO BE NOTIFIED OF DISCREPANCY.

SILTRATION NOTES:
1. SILTRATION CONTROL DEVICES TO REMAIN IN PLACE UNTIL ADEQUATE VEGETATION GROWTH INSURES NO FURTHER EROSION.
2. SILTRATION FENCES SHALL BE INSPECTED PERIODICALLY FOR DAMAGE AND FOR THE AMOUNT OF SEDIMENTATION WHICH HAS ACCUMULATED. REMOVAL OF SEDIMENT WILL BE REQUIRED WHEN IT REACHES 1/2 FENCE HEIGHT.
3. ATTACHMENT OF GEOTEXTILE FABRIC TO BE IN ACCORDANCE WITH THE MANUFACTURER'S RECOMMENDATIONS.
4. SILT FENCING TO BE USED AT ALL AREAS OF EXCAVATION.

JOINT TYPE PLAN LEGEND
CONTROL JOINT ----------
CONSTRUCTION/ EXPANSION JOINT — — — —

NOTE:
1. SLOPES SHALL NOT EXCEED 3:1 (3 FEET HORIZONTAL TO 1 FOOT VERTICAL)
2. ALL SILT FENCES HAVE 5'-0" RETURN UPHILL.

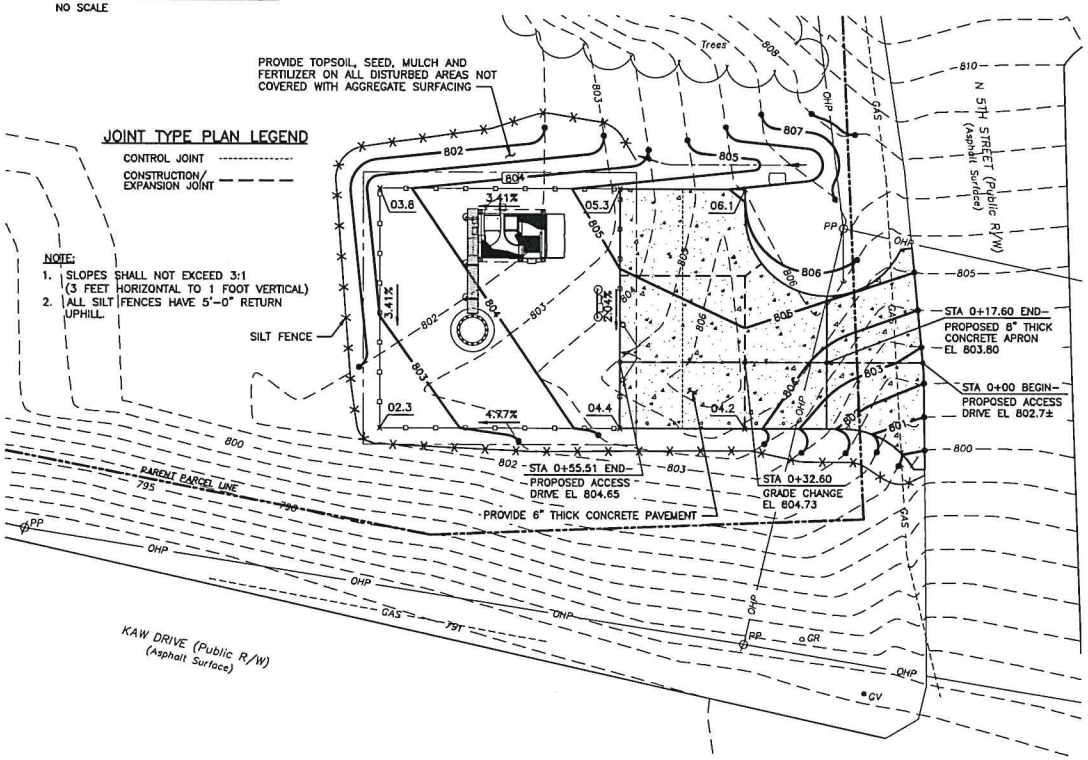

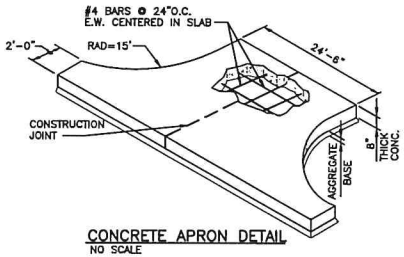

CONCRETE APRON DETAIL
NO SCALE

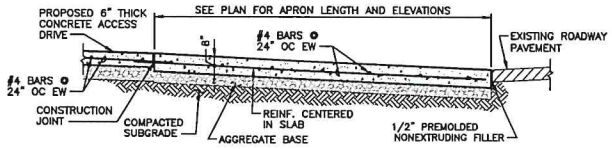

TYPICAL APRON SECTION
NO SCALE

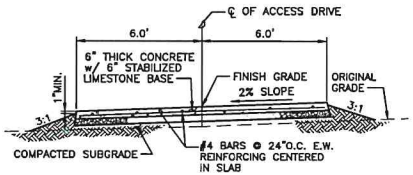

CONCRETE DRIVE SECTION
NO SCALE

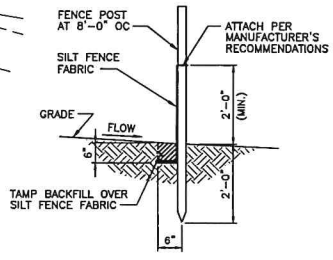

SILT FENCE DETAIL
NO SCALE

N

0' 5' 10' 20' 30'

GRADING PLAN | 1

RECEIVED
SEP 06 2016

PLANS PREPARED FOR:
verizon ✓

PLANS PREPARED BY:
9900 West 109th Street, Suite 300
Overland Park, Kansas 66210
Phone: 913-438-7700
Fax: 913-438-7777
SSC

ENGINEERING LICENSE:
STATE OF KANSAS
PE CERTIFICATE OF AUTHORIZATION #E-
ENGINEER: PE
MLO MICHAEL L OWENS STRUCTURAL/CIVIL SC
KV KEVIN VAHMAEL STRUCTURAL/CIVIL SC
REJ ROBERT E 8296 STRUCTURAL/CIVIL SC
TMS TER 9255 ELECTRICAL E
SDK SUSLING 13454 ELECTRICAL E
PRELIMINARY ISSUE

DRAWING NOTICE:
THIS DRAWING HAS NOT BEEN PUBLISHED AND IS THE SOLE PROPERTY OF SSC, INC, AND IS LENT TO THE BORROWER FOR THEIR CONFIDENTIAL USE ONLY, AND IN CONSIDERATION OF THE LOAN OF THIS DRAWING, THE BORROWER PROMISES AND AGREES TO RETURN IT UPON REQUEST AND AGREES THAT IT WILL NOT BE REPRODUCED, COPIED, LENT OR OTHERWISE DISPOSED OF DIRECTLY OR INDIRECTLY, NOR USED FOR ANY PURPOSE OTHER THAN FOR WHICH IT IS FURNISHED.

SUBMITTALS

DESCRIPTION	DATE	BY	REV
ISSUED FOR REVIEW	04/18/16	RKT	A
ISSUED FOR LESSOR REVIEW	06/06/16	RKT	B
PER CLIENT COMMENTS	06/23/16	RKT	C
PER CLIENT COMMENTS	08/08/16	RKT	D
ISSUED FOR REVIEW	09/06/16	GAA	E

SITE NAME:
KCYC EDWARDSVILLE

SITE NUMBER:
300431

SITE ADDRESS:
NORTH 5TH STREET
EDWARDSVILLE, KANSAS
66111

SHEET DESCRIPTION:
GRADING PLAN

SSC #:

SHEET NUMBER:
C-6

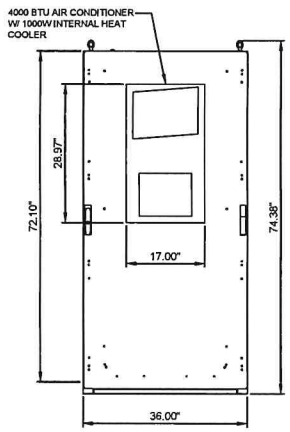

CABINET ELEVATION A

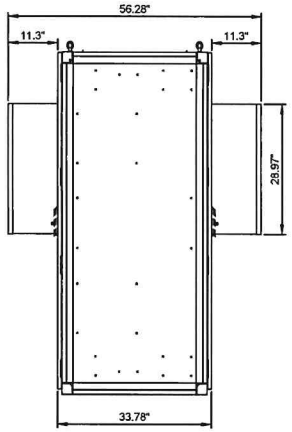

CABINET ELEVATION B

1 EMERSON F1010695 CABINET DIMENSIONS
SCALE: N.T.S

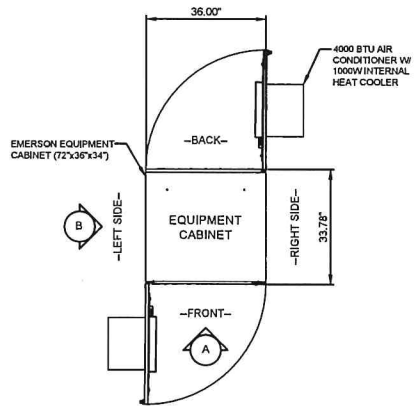

2 EMERSON F1010895 CABINET DIMENSION PLAN
SCALE: N.T.S

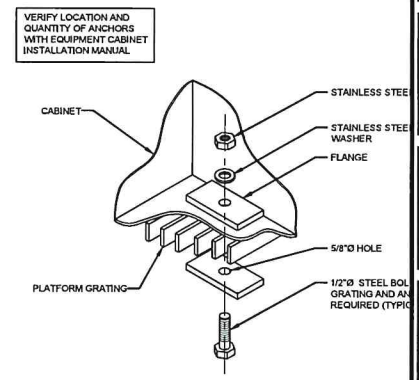

3 TYPICAL CABINET ANCHORING DETAIL
SCALE: N.T.S

Category	
DIMENSIONS & WEIGHT	72.10"H x 36.00"W x 33.78"D 1165 LBS, AS SHIPPED
FINISH	MULTI-STAGE DRY POWDER POLYESTER PAINT
FINISH COLOR	OFF- WHITE
CABLE ENTRANCE	REFER TO DETAIL #4
COOLING/HEATING SYSTEM	4000 BTU AIR CONDITIONER W/ 1000W INTERNAL HEATER 28.97"H x 17.00"W x 11.3"D 127 LBS.

NOTE:
OPTIONAL HINGED REAR DOOR REPLACES TOP TWO REMOVABLE PANELS

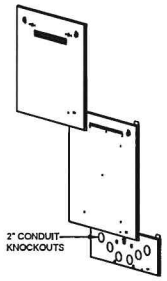

REMOVABLE PANELS (DETAIL A)

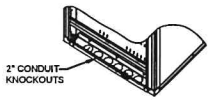

REAR (DETAIL B)

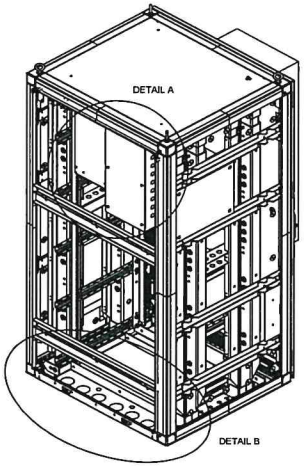

4 EMERSON F1010895 CABINET COMPONENTS
SCALE: N.T.S

EQUIPMENT CABINET DETAILS

1

PLANS PREPARED FOR:

verizon

PLANS PREPARED BY:

9900 West 109th Street, Suite 300
Overland Park, Kansas 66210
Phone: 913-438-7700
Fax: 913-438-7777
SSC

ENGINEERING LICENSE:

STATE OF KANSAS
PE CERTIFICATE OF AUTHORIZATION #E-
ENGINEER: PE #

MLO	MICHAEL L. OWENS	STRUCTURAL/CIVIL	SC
KV	KEVIN VANHAELE	STRUCTURAL/CIVIL	SC
REJ	ROBERT E.	STRUCTURAL/CIVIL	SC
TMS	TERRA	ELECTRICAL	E
SDK	SU	ELECTRICAL	E

PRELIMINARY ISSUE

DRAWING NOTICE:

THIS DRAWING HAS NOT BEEN PUBLISHED AND IS THE SOLE PROPERTY OF SSC, INC. AND IS LENT TO THE BORROWER FOR THEIR CONFIDENTIAL USE ONLY, AND IN CONSIDERATION OF THE LOAN OF THIS DRAWING, THE BORROWER PROMISES AND AGREES TO RETURN IT UPON REQUEST AND AGREES THAT IT WILL NOT BE REPRODUCED, COPIED, LENT OR OTHERWISE DISPOSED OF DIRECTLY OR INDIRECTLY, NOR USED FOR ANY PURPOSE OTHER THAN FOR WHICH IT IS FURNISHED.

SUBMITTALS

DESCRIPTION	DATE	BY	REV
ISSUED FOR REVIEW	04/18/16	RKT	A
ISSUED FOR LESSOR REVIEW	06/06/16	RKT	B
PER CLIENT COMMENTS	06/23/16	RKT	C
PER CLIENT COMMENTS	08/08/16	RKT	D
ISSUED FOR REVIEW	09/06/16	GAA	E

SITE NAME:

KCYC
EDWARDSVILLE

SITE NUMBER:

300431

SITE ADDRESS:

NORTH FIFTH STREET
EDWARDSVILLE, KANSAS
66111

SHEET DESCRIPTION:

EQUIPMENT CABINETS

SSC #: -

SHEET NUMBER: EQ-1

RECEIVED
SEP 06 2016

EMERSON F2015005	
DIMENSIONS	72.06"H x 31.81"W x 39.02"D
WEIGHT	1070 LBS (EMPTY)

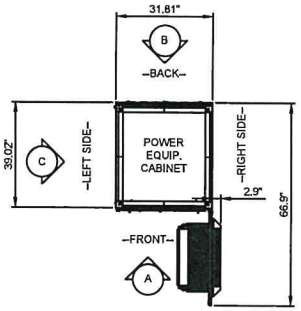

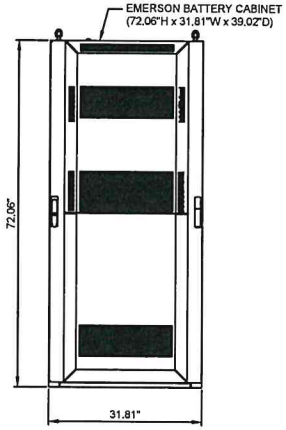

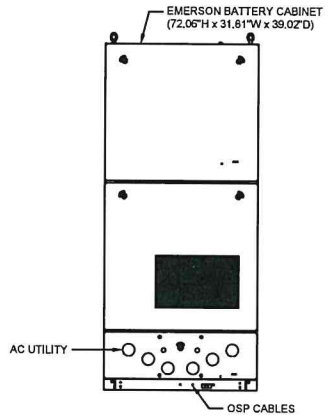

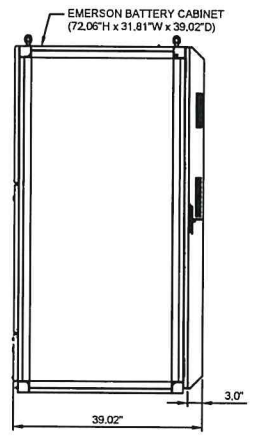

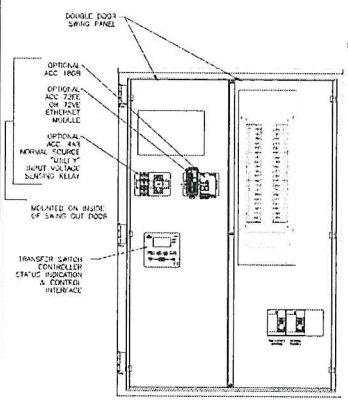

FRONT
EXTERIOR DOORS REMOVED

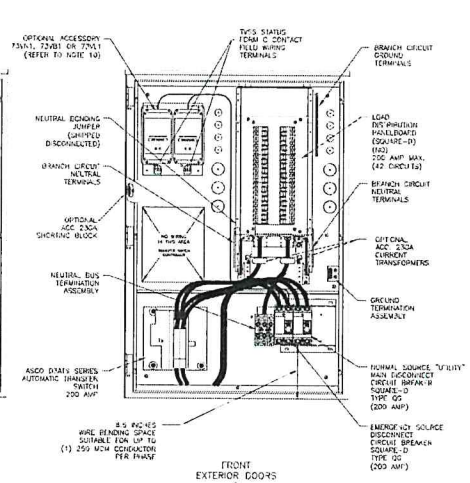

FRONT
EXTERIOR DOORS
&
DOUBLE DOOR SWING PANELS
REMOVED

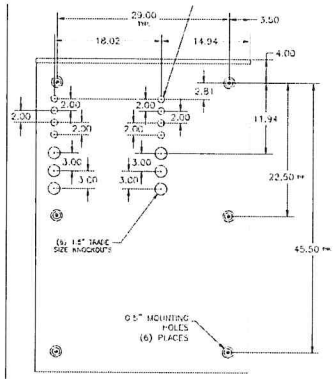

REAR

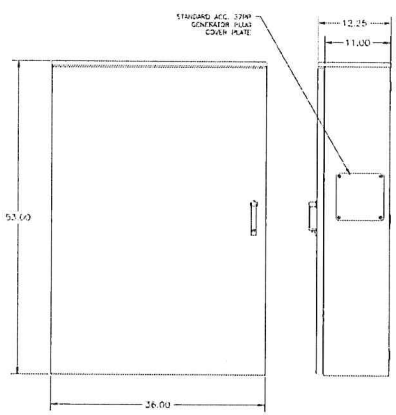

FRONT
EXTERIOR DOOR CLOSED

RIGHT SIDE

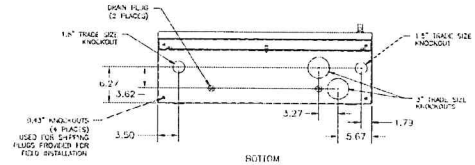

BOTTOM

MANUFACTURER	PRODUCT NO.	ILC RATED AMPS	Voltage	Phase	Enclosure Height	Enclosure Width	Enclosure Depth	Weight (lbs.)
INTERSECT, INC.	AA300-1PH-3R	200	120/240	1	53"	36"	12.25"	210

POWER EQUIPMENT CABINET DETAILS

1

RECEIVED
SEP 06 2016

PLANS PREPARED FOR:

verizon ✓

PLANS PREPARED BY:

9900 West 109th Street, Suite 300
Overland Park, Kansas 66210
Phone: 913-438-7700
Fax: 913-438-7777
SSC

ENGINEERING LICENSE:

STATE OF KANSAS
PE CERTIFICATE OF AUTHORIZATION #C-
ENGINEER: PE #

MLO	MICHAEL L. OWENS		STRUCTURAL/CIVIL	SC
KV	KEVIN VANMAE		STRUCTURAL/CIVIL	SC
REJ	ROBERT E		STRUCTURAL/CIVIL	SC
TMS	TERRANCE	9250	ELECTRICAL	E
SDK	SU	13634	ELECTRICAL	E

PRELIMINARY ISSUE

DRAWING NOTICE:

THIS DRAWING HAS NOT BEEN PUBLISHED AND IS THE SOLE PROPERTY OF SSC, INC. AND IS LENT TO THE BORROWER FOR THEIR CONFIDENTIAL USE ONLY. AND IN CONSIDERATION OF THE LOAN OF THIS DRAWING THE BORROWER PROMISES AND AGREES TO RETURN IT UPON REQUEST AND AGREES THAT IT WILL NOT BE REPRODUCED, COPIED, LENT OR OTHERWISE DISPOSED OF DIRECTLY OR INDIRECTLY, NOR USED FOR ANY PURPOSE OTHER THAN FOR WHICH IT IS FURNISHED.

SUBMITTALS

DESCRIPTION	DATE	BY	REV
ISSUED FOR REVIEW	04/18/16	RKT	A
ISSUED FOR LESSOR REVIEW	06/06/16	RKT	B
PER CLIENT COMMENTS	06/23/16	RKT	C
PER CLIENT COMMENTS	08/08/16	RKT	D
ISSUED FOR REVIEW	09/06/16	GAA	E

SITE NAME:

KCYC
EDWARDSVILLE

SITE NUMBER:

300431

SITE ADDRESS:

NORTH FIFTH STREET
EDWARDSVILLE, KANSAS
66111

SHEET DESCRIPTION:

EQUIPMENT CABINET DETAILS

SSC #: -

SHEET NUMBER: EQ-2

NOTE:
GC TO REFER TO THE "FINAL SDF" FOR RF CONFIGURATION DETAIL

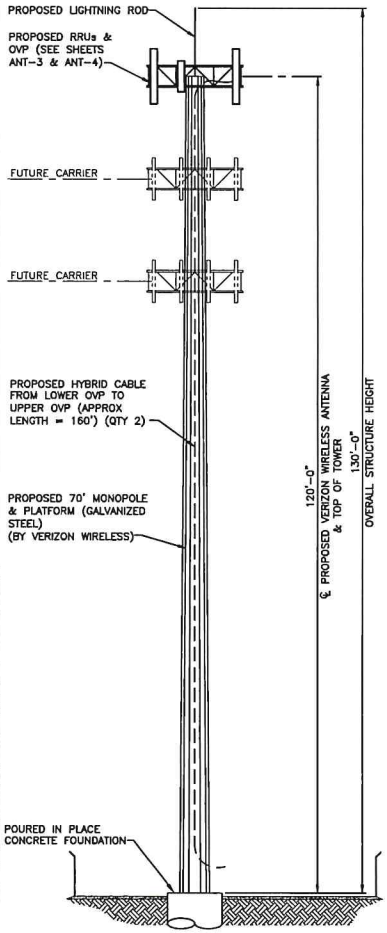

TOWER ELEVATION | 2

NOTE:
ALL EQUIPMENT IN THE ANTENNA KEY IS OUTSIDE THE SHELTER/EQUIPMENT ROOM/PLATFORM

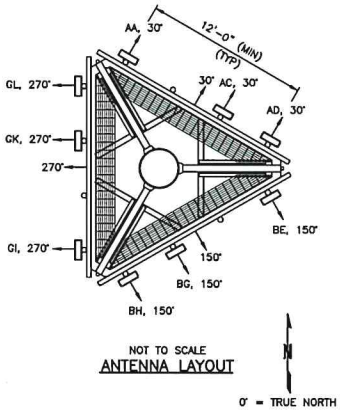

NOT TO SCALE
ANTENNA LAYOUT

NOTE:
THE ANTENNA LAYOUT IS FOR ANTENNA ORIENTATION ONLY. ALL CONNECTIONS FOR HANGERS, SUPPORTS, BRACING, ETC., SHALL BE PER TOWER MANUFACTURER'S STANDARD DETAILS.

1. ANTENNAS SHALL BE DESIGNATED FROM RIGHT TO LEFT, FACING THE ASSEMBLY FROM THE GROUND. LEFT TO RIGHT FACING THE BACK OF THE ANTENNA.
2. THE OUTER MOST ANTENNAS ON EACH FACE SHALL BE DESIGNATED AS THE RECEIVE ANTENNAS. THE INNER ANTENNAS SHALL BE DESIGNATED AS THE TRANSMIT ANTENNAS.
3. EACH TRANSMISSION LINE SHALL BE LABELED WITH BRASS "TOE TAGS", GRAINGER PART NUMBER 1F035-8, STAMPED WITH 1/4" LETTERS/NUMBERS STAMPS, GRAINGER PART NUMBER 3W639. THE LABELS SHALL BE ATTACHED WITH A SEMIPERMANENT METHOD (I.E. BLACK UV RESISTANT CABLE TIES). THE TAGS SHALL BE PLACED SO AS NOT TO COME IN CONTACT WITH THE CONNECTOR ON THE LINE AND THE METAL OF THE TOWER. LINES SHALL BE LABELED AT THE TOP, BOTTOM AT ENTRY PORT.
4. EACH LINE SHALL ALSO BE LABELED AT THE LIGHTNING/SURGE PROTECTOR MOUNTING PLATE WITH A PRINTABLE LABEL MAKER TO INDICATE LINE NUMBER AND FUNCTION, THE SAME AS THE TOE TAG.
5. THE TAG LABELING SHALL BE AS DESIGNATED IN THE ANTENNA KEY. FOR LUCENT USE A-ALPHA, B-BETA, G-GAMMA, FOR MOTOROLA REPLACE A WITH X, B WITH Y AND G WITH Z. SEE DETAIL 1 ON SHEET E02.
6. IN TWO-ANTENNA CONFIGURATION WHERE ONE ANTENNA WILL BE DUPLEXED, THE DUPLEXED ANTENNA SHALL BE LABELED AS RECEIVE.
7. CONTRACTOR SHALL FIELD VERIFY THE EXACT TMA'S (IF THEY ARE REQUIRED) PER THE OPERATIONS MANAGER.
8. COAXIAL FEEDER LENGTHS INDICATED ABOVE ARE APPROXIMATE. CONTRACTOR TO VERIFY ACTUAL LENGTH BEFORE ORDERING.
9. CONTRACTOR SHALL INSTALL PLATFORM OR MOUNTING BRACKETS AND HARDWARE FOR ALL ANTENNAS AND SHALL BE PER THE TOWER MANUFACTURERS STANDARD DETAILS OR APPROVED EQUAL.
10. CONTRACTOR TO FURNISH AND INSTALL AN EXIT PORT (IF ONE IS NOT EXISTING) IN ACCORDANCE WITH THE TOWER MANUFACTURER'S SPECIFICATIONS AND UPON THE TOWER OWNER'S APPROVAL. (TYP. AT PLATFORM AND AT BOTTOM).
11. ALL ANTENNAS AND CABLES TO BE TAGGED WITH CARRIER ID.

EQUIPMENT FURNISHED AND/OR INSTALLED BY:

DESCRIPTION	FURNISHED	INSTALLED
PLATFORM ANCHOR BOLTS	CONTRACTOR	CONTRACTOR
ANTENNA MOUNTS	TOWER VENDOR	CONTRACTOR
ANTENNAS	VERIZON WIRELESS	CONTRACTOR
CABLE LADDER	TOWER VENDOR	N/A
COAX/CABLE	VERIZON WIRELESS	CONTRACTOR
CONNECTORS	CONTRACTOR	CONTRACTOR
ENTRY PORT BOOTS	CONTRACTOR	CONTRACTOR
GPS ANTENNA	VERIZON WIRELESS	CONTRACTOR
GROUND KITS	CONTRACTOR	CONTRACTOR
HANGER KITS	CONTRACTOR	CONTRACTOR
ICE BRIDGE MATERIAL	CONTRACTOR	CONTRACTOR
RF JUMPERS (TOP)	CONTRACTOR	CONTRACTOR
EQUIPMENT PLATFORM/ CANOPY	VERIZON WIRELESS	CONTRACTOR
TOWER	VERIZON WIRELESS	CONTRACTOR
TOWER BUS BARS	CONTRACTOR	CONTRACTOR
OVP'S	VERIZON WIRELESS	CONTRACTOR
RRUS	VERIZON WIRELESS	CONTRACTOR

LOCATIONS OF ANTENNAS AS SHOWN HAVE BEEN APPROVED BY CLIENT AND/OR CLIENT'S RADIO FREQUENCY ENGINEERS. SSC ASSUMES NO RESPONSIBILITY FOR, NOR HAS SSC PERFORMED ANY INVESTIGATIONS OR STUDIES CONCERNING, THE COMPLIANCE OR NONCOMPLIANCE OF SAID ANTENNA LOCATIONS WITH ANY FCC RADIO FREQUENCY EXPOSURE REGULATIONS.

ALL STRUCTURE INFORMATION SHOWN IS FOR ILLUSTRATION PURPOSES ONLY, AND MAY DIFFER FROM THE FINAL DESIGN PROVIDED BY THE STRUCTURE MANUFACTURER. THE CONTRACTOR SHALL CONSTRUCT THE STRUCTURE, FOUNDATION, AND ALL OTHER RELATED COMPONENTS IN ACCORDANCE WITH THE STRUCTURE MANUFACTURER'S DRAWINGS AND SPECIFICATIONS.

ANTENNA KEY AND GENERAL NOTES | 1

PLANS PREPARED FOR:

verizon ✓

PLANS PREPARED BY:

9900 West 109th Street, Suite 300
Overland Park, Kansas 66210
Phone: 913-438-7700
Fax: 913-438-7777
SSC

ENGINEERING LICENSE:

STATE OF KANSAS
PE CERTIFICATE OF AUTHORIZATION #E-
ENGINEER: PE #-D
MLO MICHAEL L. OWENS STRUCTURAL/CIVIL SC
KV KEVIN VANHAELE STRUCTURAL/CIVIL SC
REJ ROBERT E. 9956 STRUCTURAL/CIVIL SC
TMS TERRANCE M. 9250 ELECTRICAL E
SDK SUSLING 3654 ELECTRICAL E
PRELIMINARY ISSUE

DRAWING NOTICE:

THIS DRAWING HAS NOT BEEN PUBLISHED AND IS THE SOLE PROPERTY OF SSC, INC. AND IS LENT TO THE BORROWER FOR THEIR CONFIDENTIAL USE ONLY, AND IN CONSIDERATION OF THE LOAN OF THIS DRAWING, THE BORROWER PROMISES AND AGREES TO RETURN IT UPON REQUEST AND AGREES THAT IT WILL NOT BE REPRODUCED, COPIED, LENT OR OTHERWISE DISPOSED OF DIRECTLY OR INDIRECTLY, NOR USED FOR ANY PURPOSE OTHER THAN FOR WHICH IT IS FURNISHED.

SUBMITTALS

DESCRIPTION	DATE	BY	REV
ISSUED FOR REVIEW	04/18/16	RKT	A
ISSUED FOR LESSOR REVIEW	06/06/16	RKT	B
PER CLIENT COMMENTS	06/23/16	RKT	C
PER CLIENT COMMENTS	08/08/16	RKT	D
ISSUED FOR REVIEW	09/06/16	GAA	E

SITE NAME:
KCYC
EDWARDSVILLE

SITE NUMBER:
300431

SITE ADDRESS:
NORTH FIFTH STREET
EDWARDSVILLE, KANSAS
66111

SHEET DESCRIPTION:
TOWER ELEVATION & ANTENNA INFORMATION

SSC #: -

SHEET NUMBER: ANT-1

RECEIVED
SEP 06 2016

NOTE:
GC TO REFER TO THE "FINAL SDF"
FOR RF CONFIGURATION DETAIL

RECEIVED
SEP 06 2016

RF DIAGRAM

1

PLANS PREPARED FOR:

verizon ✓

PLANS PREPARED BY:

9900 West 109th Street, Suite 300
Overland Park, Kansas 66210
Phone: 913-438-7700
Fax: 913-438-7777
SSC

ENGINEERING LICENSE:

STATE OF KANSAS
PE CERTIFICATE OF AUTHORIZATION #E-[illegible]
ENGINEER: PE #-[illegible]

MLO	MICHAEL L. OWENS	[illegible]	STRUCTURAL/CIVIL	SC
KV	KEVIN VANMAELE	[illegible]	STRUCTURAL/CIVIL	SC
REJ	ROBERT E. [illegible]	[illegible]96	STRUCTURAL/CIVIL	SC
TMS	TERRA[illegible]	9250	ELECTRICAL	E
SDK	SU[illegible]	[illegible]SLING 3454	ELECTRICAL	E

PRELIMINARY ISSUE

DRAWING NOTICE:

THIS DRAWING HAS NOT BEEN PUBLISHED AND IS THE SOLE PROPERTY OF SSC, INC, AND IS LENT TO THE BORROWER FOR THEIR CONFIDENTIAL USE ONLY, AND IN CONSIDERATION OF THE LOAN OF THIS DRAWING, THE BORROWER PROMISES AND AGREES TO RETURN IT UPON REQUEST AND AGREES THAT IT WILL NOT BE REPRODUCED, COPIED, LENT OR OTHERWISE DISPOSED OF DIRECTLY OR INDIRECTLY, NOR USED FOR ANY PURPOSE OTHER THAN FOR WHICH IT IS FURNISHED.

SUBMITTALS

DESCRIPTION	DATE	BY	REV
ISSUED FOR REVIEW	04/18/16	RKT	A
ISSUED FOR LESSOR REVIEW	06/06/16	RKT	B
PER CLIENT COMMENTS	06/23/16	RKT	C
PER CLIENT COMMENTS	08/02/16	RKT	D
ISSUED FOR REVIEW	09/06/16	GAA	E

SITE NAME:

KCYC
EDWARDSVILLE

SITE NUMBER:

300431

SITE ADDRESS:

NORTH FIFTH STREET
EDWARDSVILLE, KANSAS
66111

SHEET DESCRIPTION:

RF DIAGRAM

SSC #: -

SHEET NUMBER: ANT-2

NOTE:
CONTRACTOR SHALL INSTALL RRUs WITH MOUNTING INSTRUCTIONS PER MANUFACTURE'S SPECIFICATION

TOTAL WT = 73#

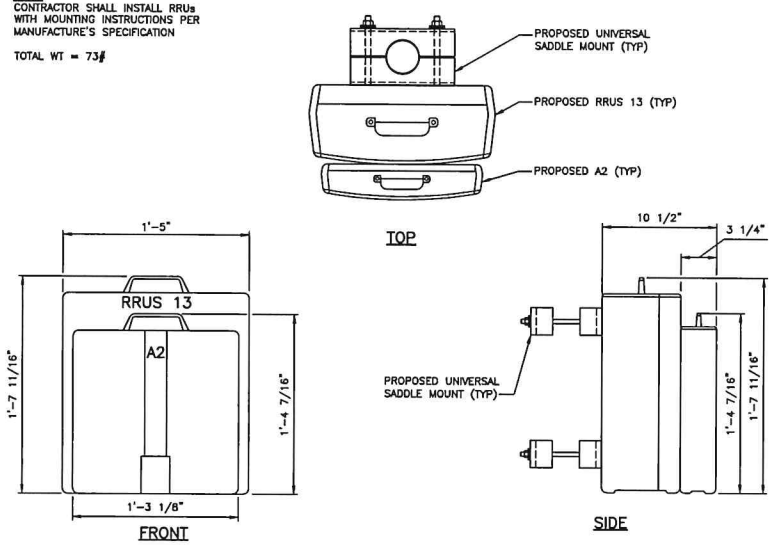

RRU MOUNTING DETAILS | 3

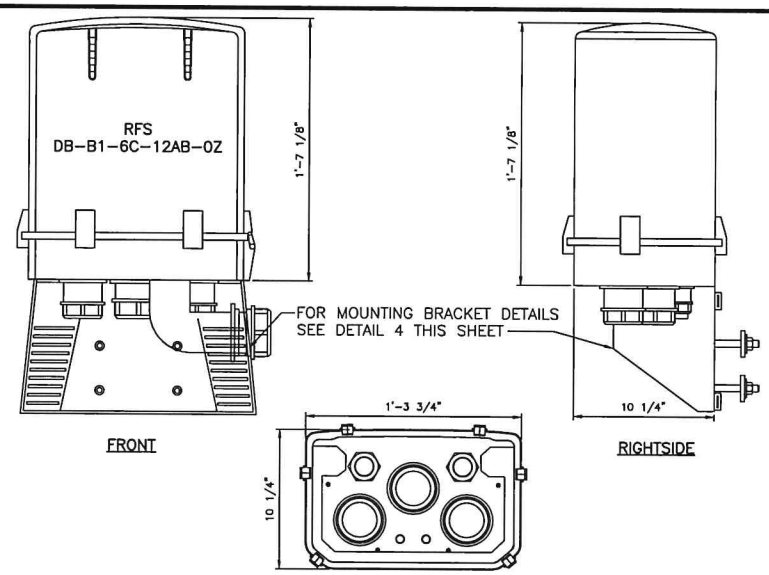

OVP MOUNTING | 1

Procedure

Mounting Procedures

4.1 A mounting base is delivered with the unit. The base allows either wall/ladder or pole mounted installation. See picture to identify the holes for each installation method.

4.2 ***Option 1: Pole Mount***
Using Pre-Installed Existing Hardware, mount Bracket to 2" to 4" diameter pole.

4.3 ***Option 2: Unistrut***
Using hardware from mounting bracket, mount to Unistrut (not supplied).

4.4 ***Option 3: Monopole***
Remove supplied Nut and Bolt Pole Hardware from Bracket. Use 1" stainless steel bands (not supplied) through slots on bracket to mount to Monopole.

OVP MOUNT | 4

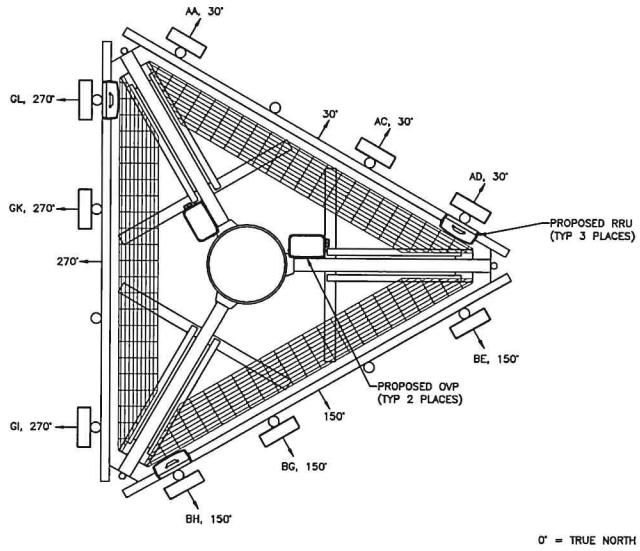

PROPOSED OVP AND/OR RRU LAYOUT (N.T.S.) | 2

RECEIVED
SEP 06 2016

PLANS PREPARED FOR:

verizon ✓

PLANS PREPARED BY:

9900 West 109th Street, Suite 300
Overland Park, Kansas 66210
Phone: 913-438-7700
Fax: 913-438-7777
SSC

ENGINEERING LICENSE:

STATE OF KANSAS
PE CERTIFICATE OF AUTHORIZATION
ENGINEER: PE

MLO	MICHAEL L. OWENS	STRUCTURAL/CIVIL	SC
KV	KEVIN VANMAELE	STRUCTURAL/CIVIL	SC
REJ	ROBERT E.	STRUCTURAL/CIVIL	SC
TMS	TERRA	ELECTRICAL	E
SDK	SU	ELECTRICAL	E

PRELIMINARY ISSUE

DRAWING NOTICE:

THIS DRAWING HAS NOT BEEN PUBLISHED AND IS THE SOLE PROPERTY OF SSC, INC. AND IS LENT TO THE BORROWER FOR THEIR CONFIDENTIAL USE ONLY. AND IN CONSIDERATION OF THE LOAN OF THIS DRAWING, THE BORROWER PROMISES AND AGREES TO RETURN IT UPON REQUEST AND AGREES THAT IT WILL NOT BE REPRODUCED, COPIED, LENT OR OTHERWISE DISPOSED OF DIRECTLY OR INDIRECTLY, NOR USED FOR ANY PURPOSE OTHER THAN FOR WHICH IT IS FURNISHED.

SUBMITTALS

DESCRIPTION	DATE	BY	REV
ISSUED FOR REVIEW	04/18/16	RKT	A
ISSUED FOR LESSOR REVIEW	06/06/16	RKT	B
PER CLIENT COMMENTS	06/23/16	RKT	C
PER CLIENT COMMENTS	08/08/16	RKT	D
ISSUED FOR REVIEW	09/06/16	GAA	E

SITE NAME:
KCYC
EDWARDSVILLE

SITE NUMBER:
300431

SITE ADDRESS:
NORTH FIFTH STREET
EDWARDSVILLE, KANSAS
66111

SHEET DESCRIPTION:
DETAILS (1 OF 3)

SSC #: -

SHEET NUMBER: ANT-3

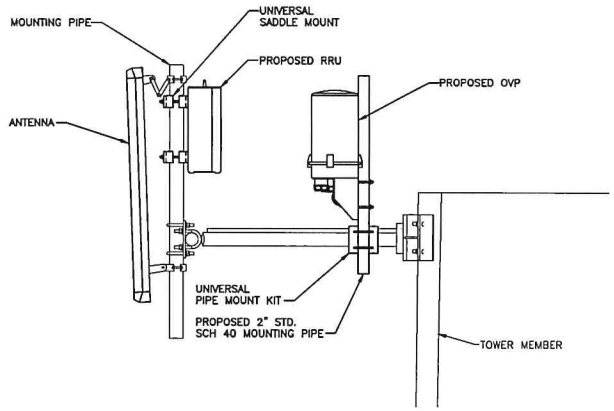

NOTES:
1. HANDRAIL OMITTED FOR CLARITY
2. SEE PROPOSED UNIT LOCATION ON SHEET ANT-3

OVP AND/OR RRU MOUNTING | 1

DETAIL NOT USED | 3

DETAIL NOT USED | 2

DETAIL NOT USED | 4

RECEIVED
SEP 06 2016

PLANS PREPARED FOR:

verizon ✓

PLANS PREPARED BY:

9900 West 109th Street, Suite 300
Overland Park, Kansas 66210
Phone: 913-438-7700
Fax: 913-438-7777
SSC

ENGINEERING LICENSE:

STATE OF KANSAS
PE CERTIFICATE OF AUTHORIZATION #C-
ENGINEER: PE #:

MLO	MICHAEL L. OWENS		STRUCTURAL/CIVIL	SC
KV	KEVIN VANMAELE		STRUCTURAL/CIVIL	SC
REJ	ROBERT E.	9956	STRUCTURAL/CIVIL	SC
TMS	TERRANCE	9250	ELECTRICAL	E
SDK	SUNG	3654	ELECTRICAL	E

PRELIMINARY ISSUE

DRAWING NOTICE:

THIS DRAWING HAS NOT BEEN PUBLISHED AND IS THE SOLE PROPERTY OF SSC, INC. AND IS LENT TO THE BORROWER FOR THEIR CONFIDENTIAL USE ONLY, AND IN CONSIDERATION OF THE LOAN OF THIS DRAWING, THE BORROWER PROMISES AND AGREES TO RETURN IT UPON REQUEST AND AGREES THAT IT WILL NOT BE REPRODUCED, COPIED, LENT OR OTHERWISE DISPOSED OF DIRECTLY OR INDIRECTLY, NOR USED FOR ANY PURPOSE OTHER THAN FOR WHICH IT IS FURNISHED.

SUBMITTALS

DESCRIPTION	DATE	BY	REV
ISSUED FOR REVIEW	04/18/16	RKT	A
ISSUED FOR LESSOR REVIEW	06/06/16	RKT	B
PER CLIENT COMMENTS	06/23/16	RKT	C
PER CLIENT COMMENTS	08/08/16	RKT	D
ISSUED FOR REVIEW	09/06/16	GAA	E

SITE NAME:

KCYC
EDWARDSVILLE

SITE NUMBER:

300431

SITE ADDRESS:

NORTH FIFTH STREET
EDWARDSVILLE, KANSAS
66111

SHEET DESCRIPTION:

DETAILS (2 OF 3)

SSC #: -

SHEET NUMBER:

ANT-4

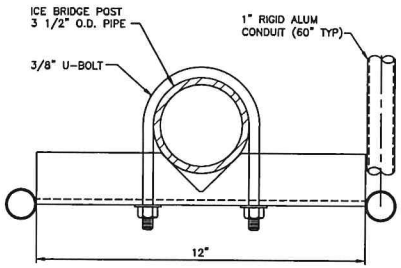

PLAN

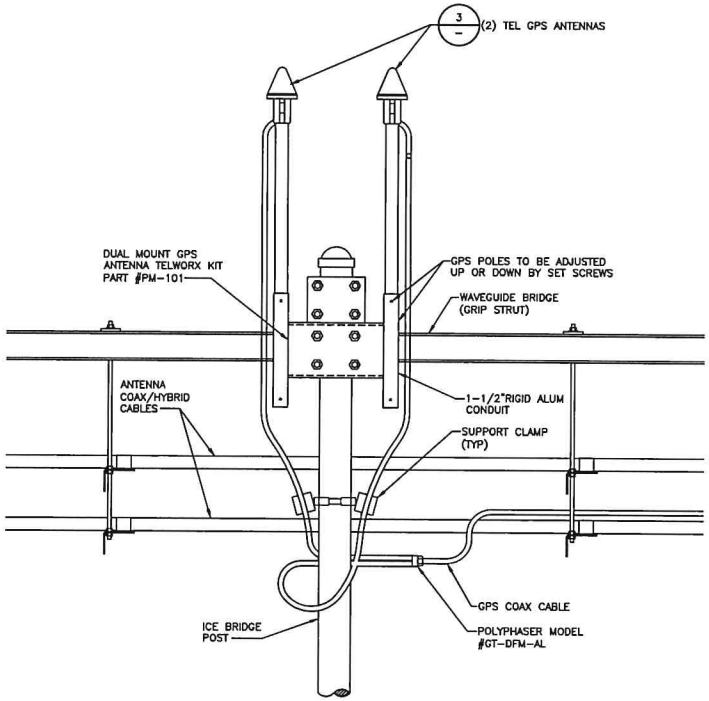

ELEVATION

GPS ANTENNA MOUNTING DETAIL | 5

NOTE:
INSTALL EACH GPS ON THE ICE BRIDGE POST FARTHEST FROM TOWER OR OBSTRUCTION (TYP 2 PL)

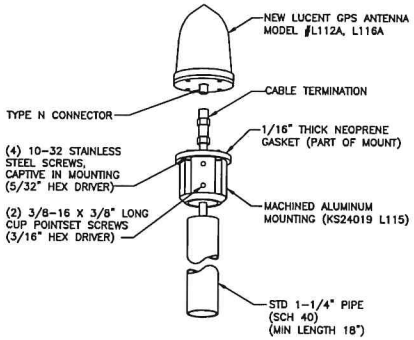

TYPICAL GPS ANTENNA DETAIL | 3

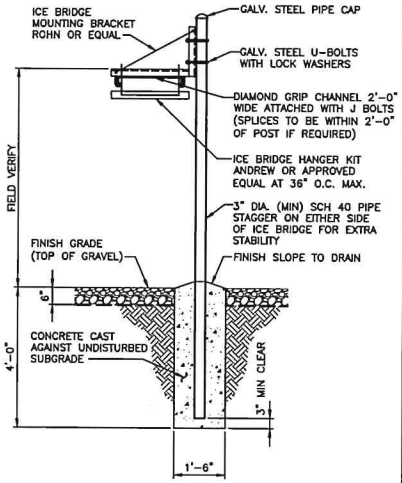

FURNISHED AND INSTALLED
BY ANTENNA CONTRACTOR

ICE BRIDGE SUPPORT POST | 1

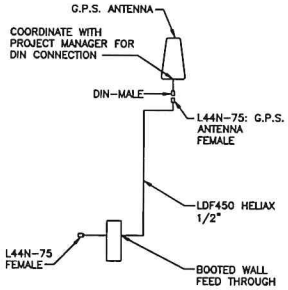

G.P.S. ANTENNA CABLE RUN | 4

MOUNT GPS ANTENNA TO ICE BRIDGE POST

1. ICE BRIDGE POST – IF THERE ARE NO TREES OR OBSTRUCTIONS BLOCKING THE SOUTHERN HEMISPHERE USE BACK TO BACK CLAMPS ON TO ICE BRIDGE POST.

A. USING DUAL MOUNT GPS ANTENNA KIT (TELWORX # PM-101 KIT OR APPROVED EQUAL) THE KIT INCLUDES 2 PC TELWORX GPS ANTENNA, THE DUAL MOUNT, 2 SURGE ARRESTORS, AND COAX PORT BOOT THAT CAN HOLD 4 1/2" COAX.

B. MOUNT GPS ANTENNA MOUNT (BOTTOM) 7FT OFF GROUND, THE GPS POLES CAN BE ADJUSTED UP/DOWN BY SET SCREW ON BASE THAT HOLDS POLES, WHEN EXTENDED UP THE GPS ANTENNAS SHOULD BE JUST ABOVE THE CANOPY LINE.
WHEN LOWERED THEY SHOULD BE APPROXIMATE. 8.5FT OFF THE GROUND AND REACHABLE FROM A 6FT LADDER.

MOUNT GPS ANTENNAS TO WALL OR TOWER

1. BUILDING – IF THERE ARE NO TREES OR OBSTRUCTIONS BLOCKING THE SOUTHERN HEMISPHERE IF THERE ARE NO EQUIPMENT RACK PIPES:
A. USING DUAL MOUNT GPS ANTENNA KIT (TELWORX # PM-101 KIT OR APPROVED EQUAL) WALL MOUNTED APPLICATION SHALL USE OFFSET BRACKETS.

2. TOWER – IF THERE ARE NEARBY TREES, BUILDINGS OR OTHER OBSTRUCTIONS TWO ANTENNAS, COAX, AND MOUNTS WILL BE NEEDED ONE INSTALLED FOR REDUNDANCY, ONE WILL BE USED ATTACH AT SAME LEVEL AS CELLULAR ANTENNAS USING EXISTING MOUNTS IF POSSIBLE WITH BACK TO BACK CLAMPS

CONTRACTORS SHALL ORDER DUAL TELWORX GPS ANTENNAS FROM THE FOLLOWING CONTACT PERSON:

EARL J. OSTERTAG
SR. EQUIPMENT ENGINEER – KSMO
(816) 868-0009

TELWORX COMMUNICATIONS, LLC
BUSINESS DEVELOPMENT DIRECTOR
CENTRAL REGION
239 WELCOME CENTER BLVD
LEXINGTON, N.C. 27295
P.O.C. ANDREW TRIPP
WORK: (773) 706-0107
WWW.TELWORX.NET
WWW.TOWERWORX.NET

DUAL GPS ANTENNA MOUNTING INSTRUCTIONS | 2

RECEIVED
SEP 06 2016

PLANS PREPARED FOR:

verizon ✓

PLANS PREPARED BY:

9900 West 109th Street, Suite 300
Overland Park, Kansas 66210
Phone: 913-438-7700
Fax: 913-438-7777

SSC

ENGINEERING LICENSE:

STATE OF KANSAS
PE CERTIFICATE OF AUTHORIZATION #E-
ENGINEER: PE #

MJO	MICHAEL L. OWENS		STRUCTURAL/CIVIL	SC
KV	KEVIN VANMALE		STRUCTURAL/CIVIL	SC
REJ	ROBERT E.	6996	STRUCTURAL/CIVIL	SC
TMS	TERRA	9250	ELECTRICAL	E
SDK	S	SLING 3654	ELECTRICAL	E

PRELIMINARY ISSUE

DRAWING NOTICE:

THIS DRAWING HAS NOT BEEN PUBLISHED AND IS THE SOLE PROPERTY OF SSC, INC. AND IS LENT TO THE BORROWER FOR THEIR CONFIDENTIAL USE ONLY, AND IN CONSIDERATION OF THE LOAN OF THIS DRAWING, THE BORROWER PROMISES AND AGREES TO RETURN IT UPON REQUEST AND AGREES THAT IT WILL NOT BE REPRODUCED, COPIED, LENT OR OTHERWISE DISPOSED OF DIRECTLY OR INDIRECTLY, NOR USED FOR ANY PURPOSE OTHER THAN FOR WHICH IT IS FURNISHED.

SUBMITTALS

DESCRIPTION	DATE	BY	REV
ISSUED FOR REVIEW	04/18/16	RKT	A
ISSUED FOR LESSOR REVIEW	06/06/16	RKT	B
PER CLIENT COMMENTS	06/23/16	RKT	C
PER CLIENT COMMENTS	08/08/16	RKT	D
ISSUED FOR REVIEW	09/06/16	GAA	E

SITE NAME:

KCYC
EDWARDSVILLE

SITE NUMBER:

300431

SITE ADDRESS:

NORTH FIFTH STREET
EDWARDSVILLE, KANSAS
66111

SHEET DESCRIPTION:

DETAILS (3 OF 3)

SSC #: -

SHEET NUMBER: ANT-5

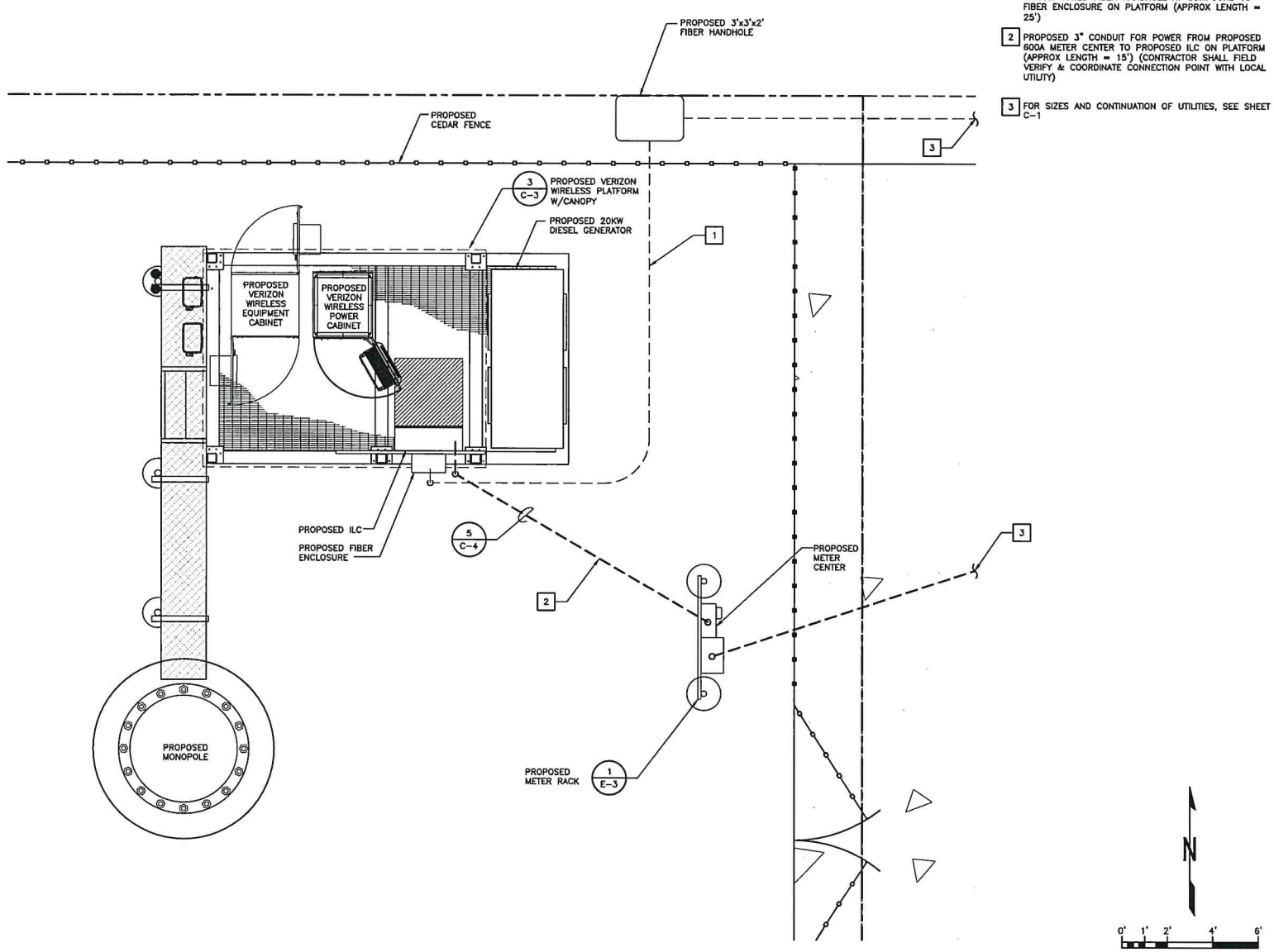

NOTE:

1. PROPOSED 4" CONDUIT W/(3) 1" INNERDUCTS W/PULL ROPE IN EACH INNERDUCT FOR FIBER FROM PROPOSED TRAFFIC RATED FIBER HANDHOLE AT COMPOUND TO FIBER ENCLOSURE ON PLATFORM (APPROX LENGTH = 25')
2. PROPOSED 3" CONDUIT FOR POWER FROM PROPOSED 600A METER CENTER TO PROPOSED ILC ON PLATFORM (APPROX LENGTH = 15') (CONTRACTOR SHALL FIELD VERIFY & COORDINATE CONNECTION POINT WITH LOCAL UTILITY)
3. FOR SIZES AND CONTINUATION OF UTILITIES, SEE SHEET C-1

ELECTRICAL – SITE PLAN

1

RECEIVED
SEP 06 2016

PLANS PREPARED FOR:

verizon ✓

PLANS PREPARED BY:

9900 West 109th Street, Suite 300
Overland Park, Kansas 66210
Phone: 913-438-7700
Fax: 913-438-7777
SSC

ENGINEERING LICENSE:

STATE OF KANSAS
PE CERTIFICATE OF AUTHORIZATION #E-
ENGINEER: PE #-

MLO	MICHAEL L. OWENS		STRUCTURAL/CIVIL	SC
KV	KEVIN VANHAELE		STRUCTURAL/CIVIL	SC
REJ	ROBERT E	8998	STRUCTURAL/CIVIL	SC
TMS	TERRANCE	9250	ELECTRICAL	E
SDK	SU	13654	ELECTRICAL	E

PRELIMINARY ISSUE

DRAWING NOTICE:

THIS DRAWING HAS NOT BEEN PUBLISHED AND IS THE SOLE PROPERTY OF SSC, INC, AND IS LENT TO THE BORROWER FOR THEIR CONFIDENTIAL USE ONLY, AND IN CONSIDERATION OF THE LOAN OF THIS DRAWING THE BORROWER PROMISES AND AGREES TO RETURN IT UPON REQUEST AND AGREES THAT IT WILL NOT BE REPRODUCED, COPIED, LENT OR OTHERWISE DISPOSED OF DIRECTLY OR INDIRECTLY, NOR USED FOR ANY PURPOSE OTHER THAN FOR WHICH IT IS FURNISHED.

SUBMITTALS

DESCRIPTION	DATE	BY	REV
ISSUED FOR REVIEW	04/18/16	RKT	A
ISSUED FOR LESSOR REVIEW	06/06/16	RKT	B
PER CLIENT COMMENTS	06/23/16	RKT	C
PER CLIENT COMMENTS	08/08/16	RKT	D
ISSUED FOR REVIEW	09/06/16	GAA	E

SITE NAME:

KCYC
EDWARDSVILLE

SITE NUMBER:

300431

SITE ADDRESS:

NORTH FIFTH STREET
EDWARDSVILLE, KANSAS
66111

SHEET DESCRIPTION:

ELECTRICAL-
SITE PLAN

SSC #: -

SHEET NUMBER: E-1

NOTES:

1. ALL ELECTRICAL WORK SHALL CONFORM TO REQUIREMENTS OF THE NATIONAL ELECTRICAL CODE AS A MINIMUM STANDARD.
2. ALL ABOVE GROUND CONDUIT SHALL BE RIGID GALVANIZED STEEL (RGS).
3. ALL UNDERGROUND CONDUIT SHALL BE SCH 40 PVC UNLESS OTHERWISE INDICATED OR AS REQUIRED THE LOCAL UTILITY COMPANY. ALL UNDERGROUND 90° ELBOWS SHALL BE SWEEPING BENDS.
4. ALL WIRING AND CONDUIT TO BE SUPPLIED AND INSTALLED BY CONTRACTOR UNLESS OTHERWISE NOTED.

GENERAL NOTES 3

GROUNDING NOTES:

1. GROUND ROD – 3/4" DIA X 10' LONG COPPER CLAD STEEL GROUND ROD
2. #2 STRANDED INSULATED CU GROUND WIRE IN 3/4" PVC CONDUIT ABOVE GRADE
3. CONTRACTOR TO PROVIDE AN AC POWERED SMOKE DETECTOR GENTEX 7100F OR EQUIVALENT FOR EACH CABINET, & (1) GRAINGER 1UHH2 HI TEMP ALARM FOR THE EQUIPMENT CABINET
4. #2/0 STRANDED INSULATED CU GROUNDING ELECTRODE CONDUCTOR IN 1" PVC CONDUIT ABOVE GRADE.

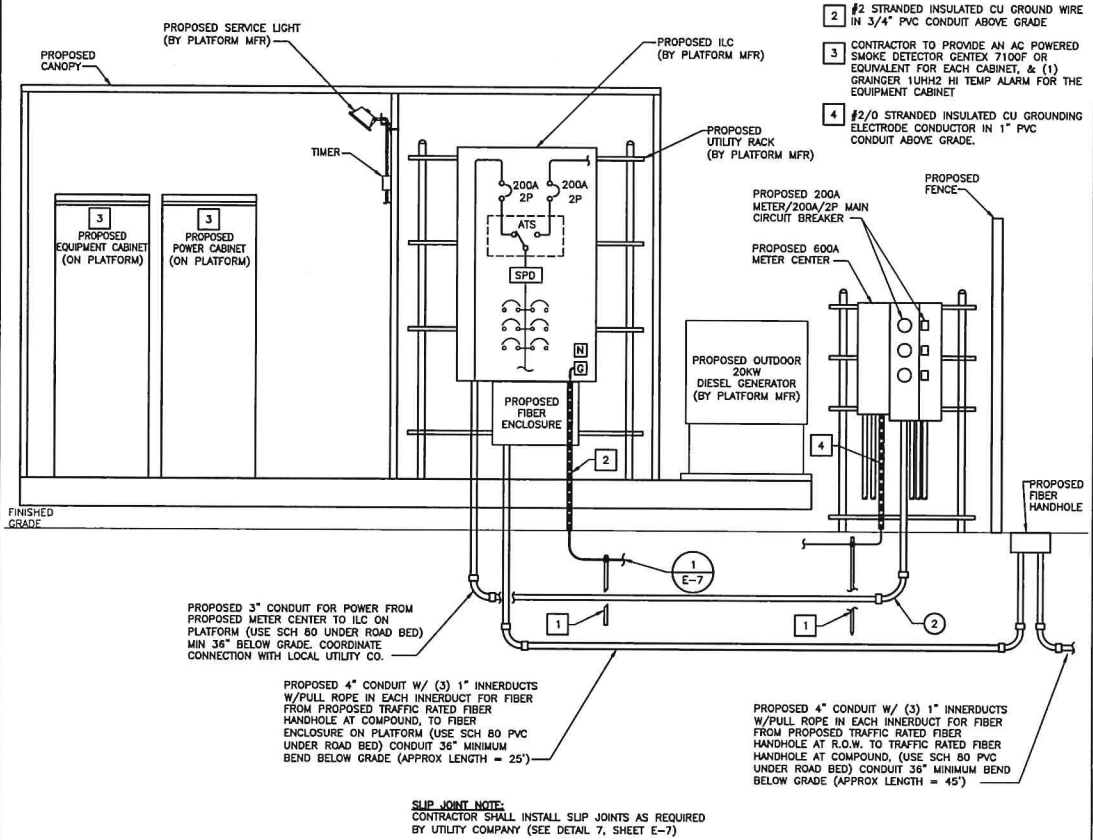

SLIP JOINT NOTE:
CONTRACTOR SHALL INSTALL SLIP JOINTS AS REQUIRED BY UTILITY COMPANY (SEE DETAIL 7, SHEET E-7)

ELECTRICAL RISER DIAGRAM 4

NOTE:
SEE GN-1 FOR LEGEND

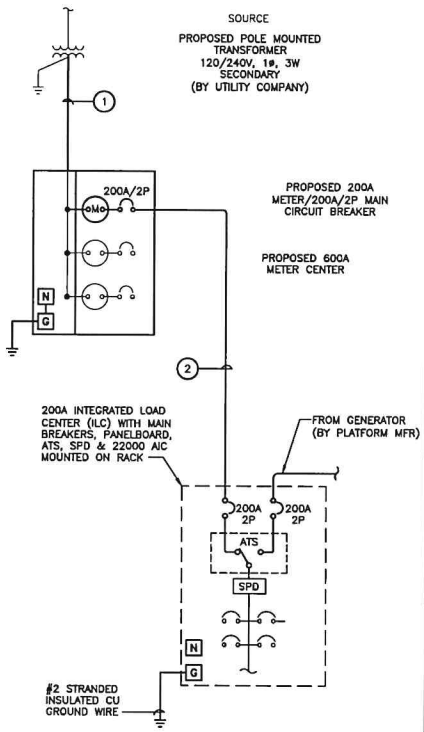

ONE-LINE DIAGRAM 1

NO.	FROM	TO	CONFIGURATION	FUNCTION
1	EXISTING UTILITY TRANSFORMER	METER CENTER	(2) 3-350 KCMIL, EACH IN 3" CONDUIT	SERVICE LATERAL
2	METER CENTER	ILC	3#3/0, 1#6G, 3" C	NORMAL POWER FEEDER TO ILC

CIRCUIT SCHEDULE 2

PLANS PREPARED FOR:

verizon ✓

PLANS PREPARED BY:

9900 West 109th Street, Suite 300
Overland Park, Kansas 66210
Phone: 913-438-7700
Fax: 913-438-7777
SSC

ENGINEERING LICENSE:

STATE OF KANSAS
PE CERTIFICATE OF AUTHORIZATION #E-
ENGINEER: PE #-

MLO	MICHAEL L. OWENS		STRUCTURAL/CIVIL	SC
KV	KEVIN VANMARLE		STRUCTURAL/CIVIL	SC
RCJ	ROBERT E.	998	STRUCTURAL/CIVIL	SC
TMS	TERRANCE	8250	ELECTRICAL	E
SDK	SU	SLINGI 3654	ELECTRICAL	E

PRELIMINARY ISSUE

DRAWING NOTICE:

THIS DRAWING HAS NOT BEEN PUBLISHED AND IS THE SOLE PROPERTY OF SSC, INC. AND IS LENT TO THE BORROWER FOR THEIR CONFIDENTIAL USE ONLY, AND IN CONSIDERATION OF THE LOAN OF THIS DRAWING, THE BORROWER PROMISES AND AGREES TO RETURN IT UPON REQUEST AND AGREES THAT IT WILL NOT BE REPRODUCED, COPIED, LENT OR OTHERWISE DISPOSED OF DIRECTLY OR INDIRECTLY, NOR USED FOR ANY PURPOSE OTHER THAN FOR WHICH IT IS FURNISHED.

SUBMITTALS

DESCRIPTION	DATE	BY	REV
ISSUED FOR REVIEW	04/18/16	RKT	A
ISSUED FOR LESSOR REVIEW	06/06/16	RKT	B
PER CLIENT COMMENTS	06/23/16	RKT	C
PER CLIENT COMMENTS	08/08/16	RKT	D
ISSUED FOR REVIEW	09/06/16	GAA	E

SITE NAME:
KCYC
EDWARDSVILLE

SITE NUMBER:
300431

SITE ADDRESS:
NORTH FIFTH STREET
EDWARDSVILLE, KANSAS
66111

SHEET DESCRIPTION:
ELECTRICAL - RISER & ONE-LINE DIAGRAM

SSC #: -

SHEET NUMBER: E-2

RECEIVED
SEP 06 2016

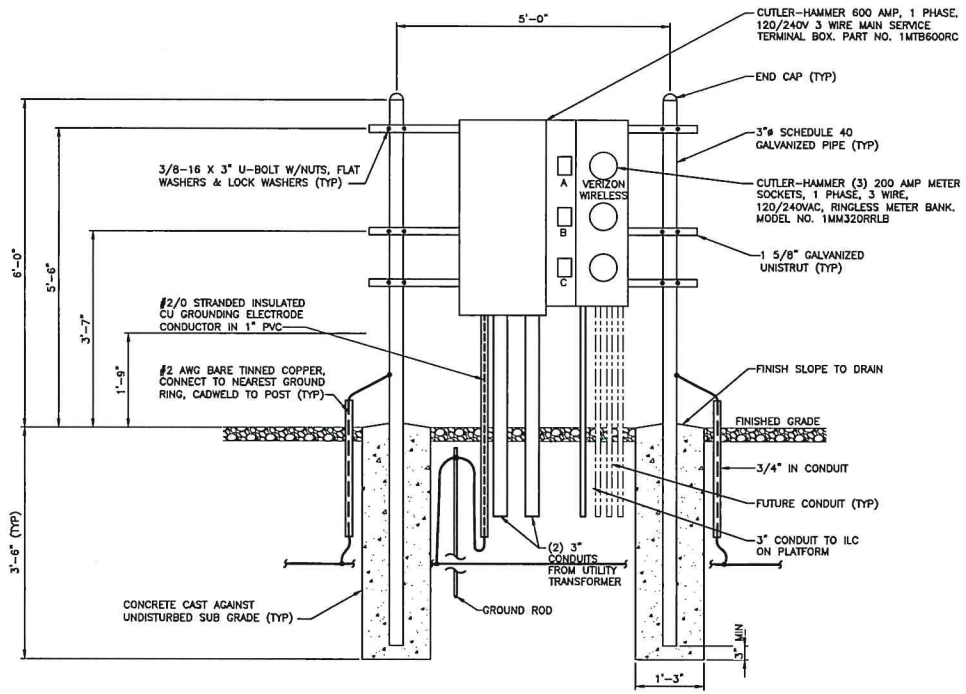

NOTES:

1. ALL WORK SHALL CONFORM TO THE NATIONAL ELECTRICAL CODE AND THE LOCAL BUILDING CODES. ALL COMPONENTS SHALL BE U.L. LISTED.
2. ALL COMPONENTS TO BE AS SPECIFIED OR EQUIVALENT AS APPROVED BY VERIZON WIRELESS.
3. ALL BREAKERS SUPPLIED BY CARRIERS.
4. METERS SHALL FACE FENCE.
5. BELOW GRADE CADWELD CONNECTIONS ARE TYPE-TA.

METER RACK DETAIL

1

RECEIVED
SEP 06 2016

PLANS PREPARED FOR:

verizon ✓

PLANS PREPARED BY:

9900 West 109th Street, Suite 300
Overland Park, Kansas 66210
Phone: 913-438-7700
Fax: 913-438-7777
SSC

ENGINEERING LICENSE:

STATE OF KANSAS
PE CERTIFICATE OF AUTHORIZATION #E-
ENGINEER: PE #:

PRELIMINARY ISSUE

MLO	MICHAEL L. OWENS		STRUCTURAL/CIVIL	SC
KV	KEVIN VANMAELE		STRUCTURAL/CIVIL	SC
REJ	ROBERT E.	9	STRUCTURAL/CIVIL	SC
TMS	TERRAN	9250	ELECTRICAL	E
SDK	SH	3654	ELECTRICAL	E

DRAWING NOTICE:

THIS DRAWING HAS NOT BEEN PUBLISHED AND IS THE SOLE PROPERTY OF SSC, INC. AND IS LENT TO THE BORROWER FOR THEIR CONFIDENTIAL USE ONLY, AND IN CONSIDERATION OF THE LOAN OF THIS DRAWING, THE BORROWER PROMISES AND AGREES TO RETURN IT UPON REQUEST AND AGREES THAT IT WILL NOT BE REPRODUCED, COPIED, LENT OR OTHERWISE DISPOSED OF DIRECTLY OR INDIRECTLY, NOR USED FOR ANY PURPOSE OTHER THAN FOR WHICH IT IS FURNISHED.

SUBMITTALS

DESCRIPTION	DATE	BY	REV
ISSUED FOR REVIEW	04/18/16	RKT	A
ISSUED FOR LESSOR REVIEW	06/06/16	RKT	B
PER CLIENT COMMENTS	06/23/16	RKT	C
PER CLIENT COMMENTS	08/08/16	RKT	D
ISSUED FOR REVIEW	09/06/16	GAA	E

SITE NAME:

KCYC
EDWARDSVILLE

SITE NUMBER:

300431

SITE ADDRESS:

NORTH FIFTH STREET
EDWARDSVILLE, KANSAS
66111

SHEET DESCRIPTION:

ELECTRICAL
METER RACK

SSC #: -

SHEET NUMBER:

E-3

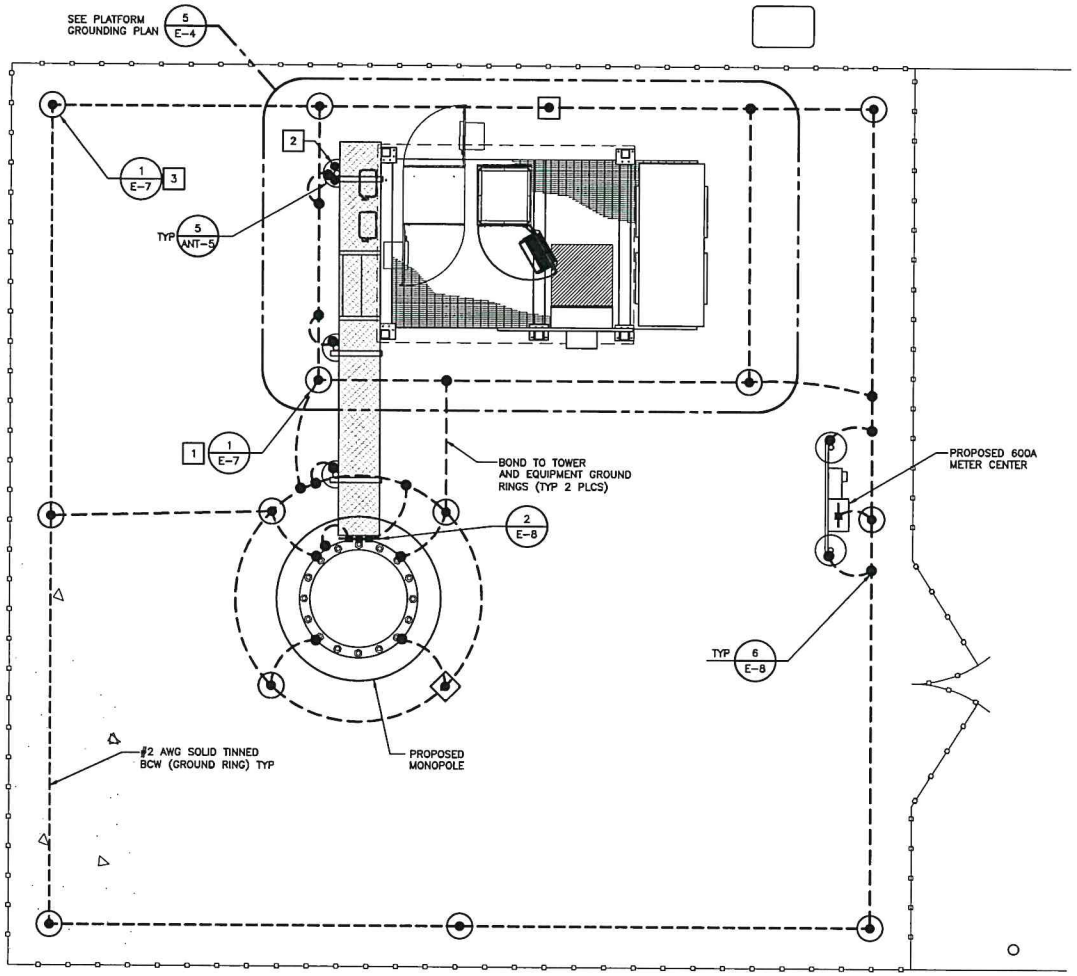

NOTES:

1. ALL GROUND RODS SPACED AT 8'-0" MIN, 15'-0" MAX AROUND PERIMETER OF EQUIPMENT.
2. MOUNT AND GROUND GPS ANTENNA TO ICE BRIDGE POST.
3. GROUND RODS SPACED AT 20' MAX AROUND PERIMETER OF FENCE

NOTE:
SEE GN-1 FOR LEGEND

N

0' 1' 2' 4' 6' 8'

ENLARGED SITE PLAN

1

RECEIVED
SEP 06 2016

PLANS PREPARED FOR:

verizon ✓

PLANS PREPARED BY:

9900 West 109th Street, Suite 300
Overland Park, Kansas 66210
Phone: 913-438-7700
Fax: 913-438-7777
SSC

ENGINEERING LICENSE:

STATE OF KANSAS
PE CERTIFICATE OF AUTHORIZATION #C-
ENGINEER: PE #

MLO	MICHAEL L. OWENS		STRUCTURAL/CIVIL	SC
KV	KEVIN VANHAELE		STRUCTURAL/CIVIL	SC
REJ	ROBERT E.	6996	STRUCTURAL/CIVIL	SC
TMS	TERRA	9250	ELECTRICAL	E
SDK	SU	3654	ELECTRICAL	E

PRELIMINARY ISSUE

DRAWING NOTICE:

THIS DRAWING HAS NOT BEEN PUBLISHED AND IS THE SOLE PROPERTY OF SSC, INC. AND IS LENT TO THE BORROWER FOR THEIR CONFIDENTIAL USE ONLY, AND IN CONSIDERATION OF THE LOAN OF THIS DRAWING, THE BORROWER PROMISES AND AGREES TO RETURN IT UPON REQUEST AND AGREES THAT IT WILL NOT BE REPRODUCED, COPIED, LENT OR OTHERWISE DISPOSED OF DIRECTLY OR INDIRECTLY, NOR USED FOR ANY PURPOSE OTHER THAN FOR WHICH IT IS FURNISHED.

SUBMITTALS

DESCRIPTION	DATE	BY	REV
ISSUED FOR REVIEW	04/18/16	RKT	A
ISSUED FOR LESSOR REVIEW	06/06/16	RKT	B
PER CLIENT COMMENTS	06/23/16	RKT	C
PER CLIENT COMMENTS	08/08/16	RKT	D
ISSUED FOR REVIEW	09/06/16	GAA	E

SITE NAME:
KCYC
EDWARDSVILLE

SITE NUMBER:
300431

SITE ADDRESS:
NORTH FIFTH STREET
EDWARDSVILLE, KANSAS
66111

SHEET DESCRIPTION:
ELECTRICAL-
GROUNDING PLAN

SSC #: -

SHEET NUMBER: E-4

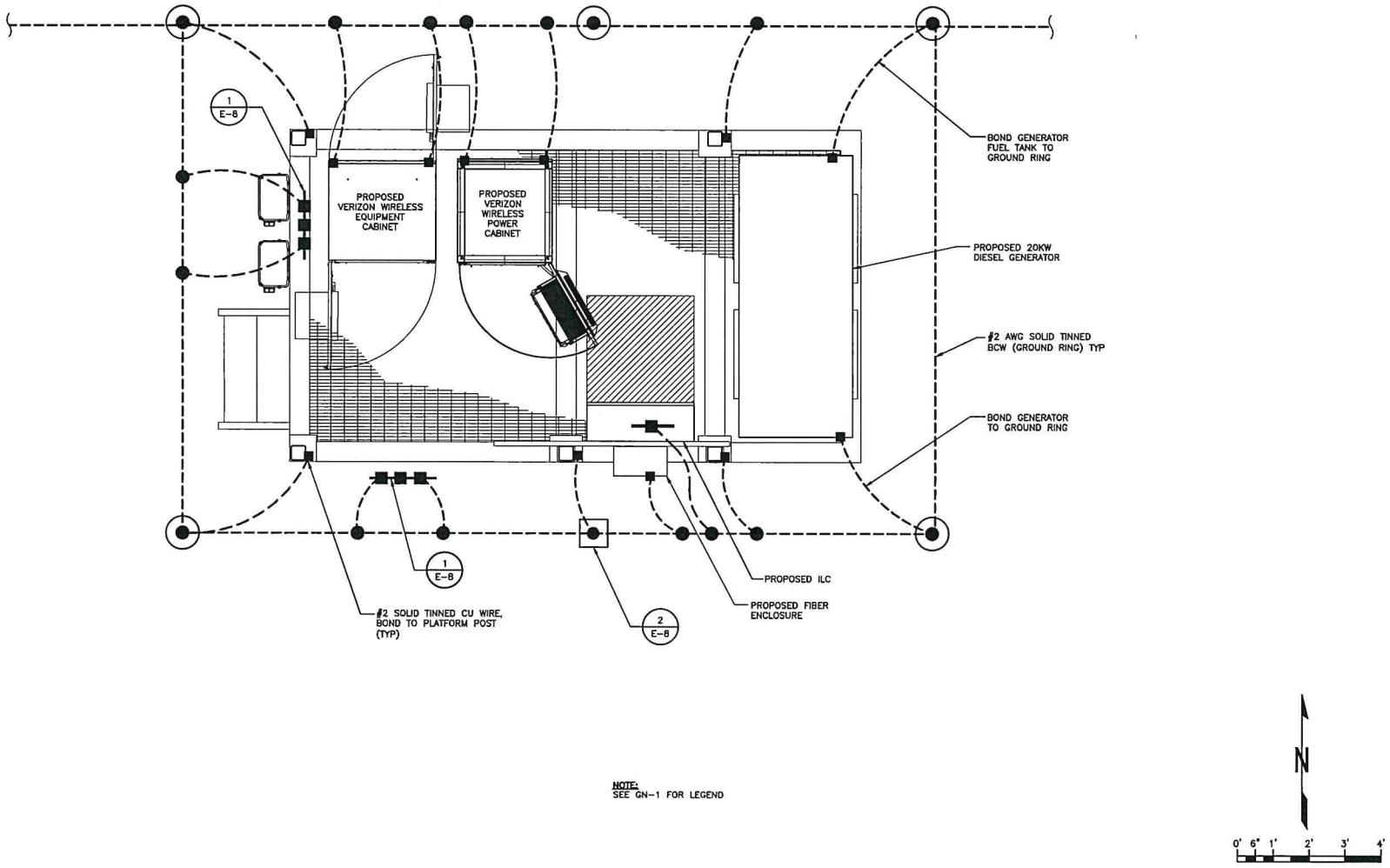

NOTE:
SEE GN-1 FOR LEGEND

PLATFORM GROUNDING PLAN

1

PLANS PREPARED FOR:

verizon ✓

PLANS PREPARED BY:

9900 West 109th Street, Suite 300
Overland Park, Kansas 66210
Phone: 913-438-7700
Fax: 913-438-7777
SSC

ENGINEERING LICENSE:

STATE OF KANSAS
PE CERTIFICATE OF AUTHORIZATION #C-
ENGINEER: PE #-

MLO	MICHAEL L. OWENS		STRUCTURAL/CIVIL	SC
KV	KEVIN VANHAELE		STRUCTURAL/CIVIL	SC
REJ	ROBERT E.	8956	STRUCTURAL/CIVIL	SC
TMS	TERRANCE	9250	ELECTRICAL	E
SDK		3654	ELECTRICAL	E

PRELIMINARY ISSUE

DRAWING NOTICE:

THIS DRAWING HAS NOT BEEN PUBLISHED AND IS THE SOLE PROPERTY OF SSC, INC. AND IS LENT TO THE BORROWER FOR THEIR CONFIDENTIAL USE ONLY. AND IN CONSIDERATION OF THE LOAN OF THIS DRAWING THE BORROWER PROMISES AND AGREES TO RETURN IT UPON REQUEST AND AGREES THAT IT WILL NOT BE REPRODUCED, COPIED, LENT OR OTHERWISE DISPOSED OF DIRECTLY OR INDIRECTLY, NOR USED FOR ANY PURPOSE OTHER THAN FOR WHICH IT IS FURNISHED.

SUBMITTALS

DESCRIPTION	DATE	BY	REV
ISSUED FOR REVIEW	04/18/16	RKT	A
ISSUED FOR LESSOR REVIEW	05/06/16	RKT	B
PER CLIENT COMMENTS	06/23/16	RKT	C
PER CLIENT COMMENTS	08/08/16	RKT	D
ISSUED FOR REVIEW	09/06/16	GAA	E

SITE NAME:
KCYC
EDWARDSVILLE

SITE NUMBER:
300431

SITE ADDRESS:
NORTH FIFTH STREET
EDWARDSVILLE, KANSAS
66111

SHEET DESCRIPTION:
ELECTRICAL- PLATFORM GROUNDING PLAN

SSC #: -

SHEET NUMBER: E-5

RECEIVED
SEP 06 2016

NOTE:
GROUND LEADS SHALL HAVE 1/2" PVC CONDUIT SLEEVE FROM MIN 24" BELOW GRADE TO 6" FROM CONNECTION POINT.

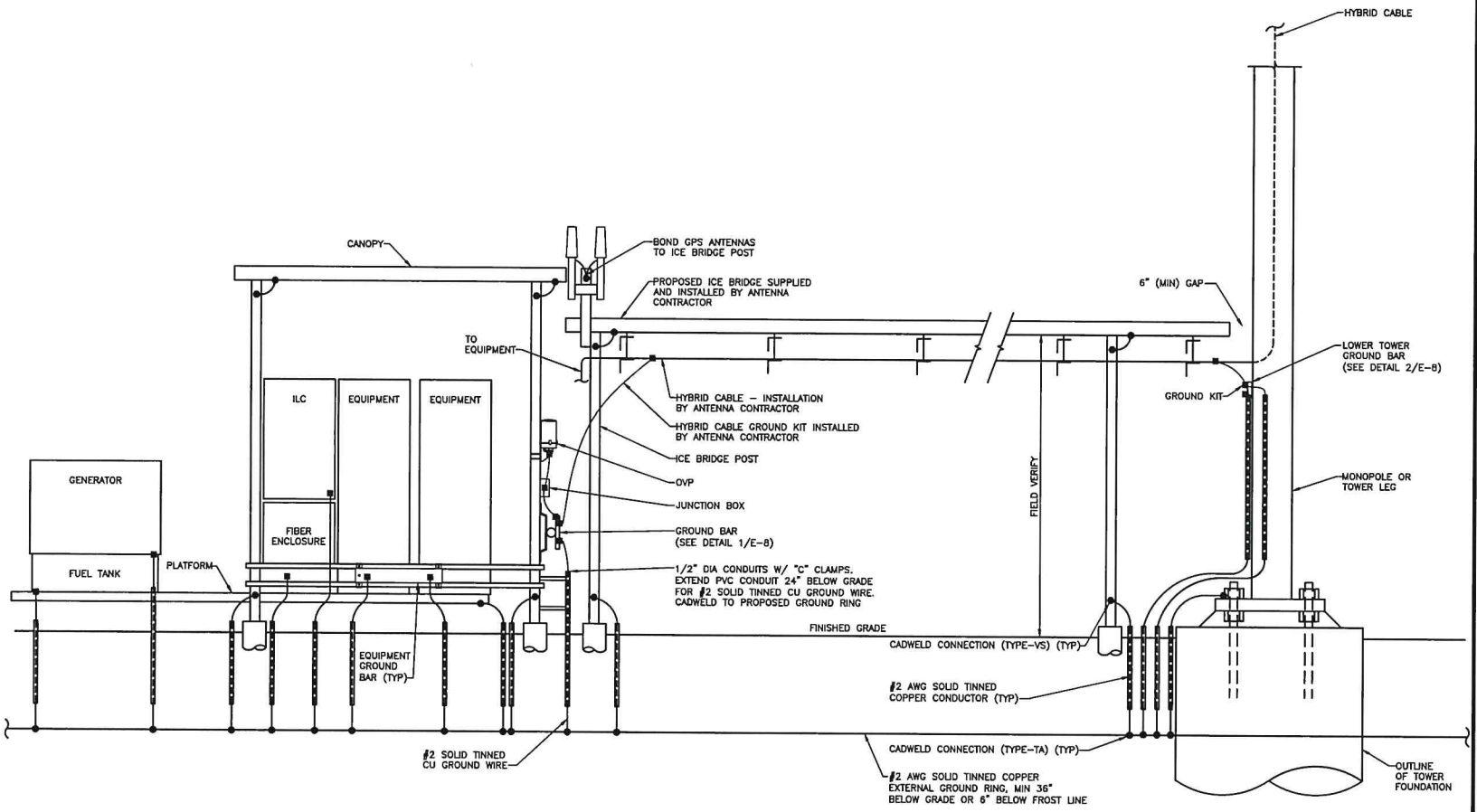

GROUNDING RISER

1

RECEIVED
SEP 06 2016

PLANS PREPARED FOR:

verizon ✓

PLANS PREPARED BY:

SSC
9900 West 109th Street, Suite 300
Overland Park, Kansas 66210
Phone: 913-438-7700
Fax: 913-438-7777

ENGINEERING LICENSE:

STATE OF KANSAS
PE CERTIFICATE OF AUTHORIZATION #E
ENGINEER: PE #
MLO MICHAEL L. OWENS STRUCTURAL/CIVIL
KV KEVIN VANHAELE STRUCTURAL/CIVIL
REJ ROBERT E. STRUCTURAL/CIVIL
TMS TERRA 9250 ELECTRICAL
SDK SUNG 3654 ELECTRICAL

PRELIMINARY ISSUE

DRAWING NOTICE:

THIS DRAWING HAS NOT BEEN PUBLISHED AND IS THE SOLE PROPERTY OF SSC, INC. AND IS LENT TO THE BORROWER FOR THEIR CONFIDENTIAL USE ONLY, AND IN CONSIDERATION OF THE LOAN OF THIS DRAWING, THE BORROWER PROMISES AND AGREES TO RETURN IT UPON REQUEST AND AGREES THAT IT WILL NOT BE REPRODUCED, COPIED, LENT OR OTHERWISE DISPOSED OF DIRECTLY OR INDIRECTLY, NOR USED FOR ANY PURPOSE OTHER THAN FOR WHICH IT IS FURNISHED.

SUBMITTALS

DESCRIPTION	DATE	BY	REV
ISSUED FOR REVIEW	04/18/16	RKT	A
ISSUED FOR LESSOR REVIEW	06/06/16	RKT	B
PER CLIENT COMMENTS	08/23/16	RKT	C
PER CLIENT COMMENTS	08/08/16	RKT	D
ISSUED FOR REVIEW	09/06/16	GAA	E

SITE NAME:

KCYC
EDWARDSVILLE

SITE NUMBER:

300431

SITE ADDRESS:

NORTH FIFTH STREET
EDWARDSVILLE, KANSAS
66111

SHEET DESCRIPTION:

ELECTRICAL - GROUNDING RISER

SSC #: -

SHEET NUMBER: E-6

NOTES:

1. DO NOT INSTALL CABLE GROUND KIT AT A BEND AND ALWAYS DIRECT GROUND WIRE DOWN TO GROUND BAR.
2. THIS DETAIL IS TYPICAL FOR EACH CABLE WHERE IT IS SPECIFIED TO BE GROUNDED.
3. CABLE TO BE GROUNDED AT ANTENNA LEVEL AND PRIOR TO ENTERING EQUIPMENT CABINET.
4. CABLE ALSO TO BE GROUNDED TO GROUND BAR AT TOWER BASE IF APPLICABLE.
5. USE ONLY TIN PLATED GROUNDING LUGS.

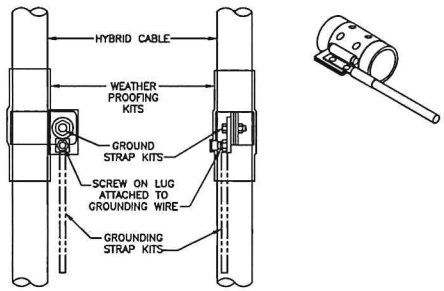

COAX/ HYBRID GROUND KIT DETAIL | 6

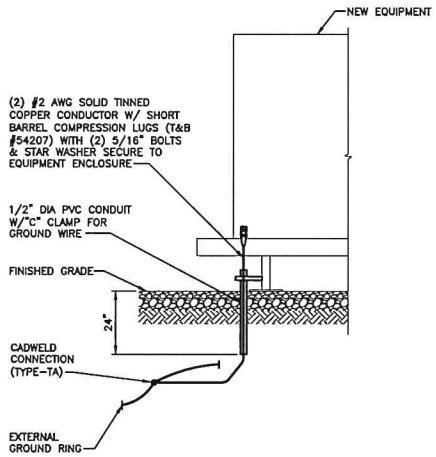

MECHANICAL GROUNDING DETAIL | 4

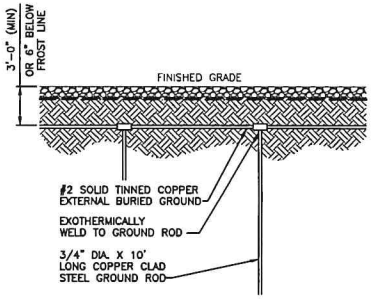

EXTERNAL GROUND RING DETAIL | 1

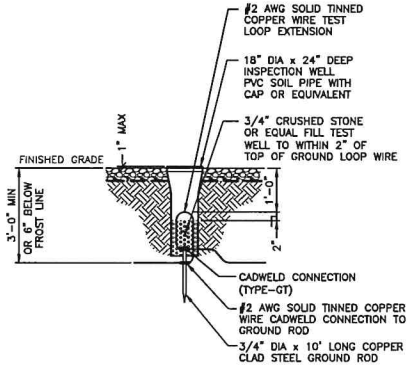

INSPECTION WELL | 2

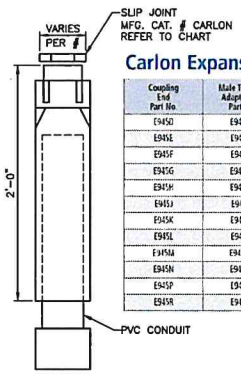

Carlon Expansion Fittings

Coupling End Part No.	Male Terminal Adapter End Part No.	Size	Std. Ctn. Qty.	Travel Length (in.)
E945D	E945DX	1/2	20	4"
E945E	E945EX	3/4	15	4"
E945F	E945FX	1	10	4"
E945G	E945GX	1 1/4	5	4"
E945H	E945HX	1 1/2	5	4"
E945J	E945JX	2	15	8"
E945K	E945KX	2 1/2	10	8"
E945L	E945LX	3	10	8"
E945M	E945MX	3 1/2	5	8"
E945N	E945NX	4	5	8"
E945P	E945PX	5	1	8"
E945R	E945RX	6	1	8"

SLIP JOINT NOTE:
CONTRACTOR SHALL INSTALL SLIP JOINTS AS REQ'D BY UTILITY COMPANY

N.T.S.

SLIP JOINT DETAIL | 7

DETAIL NOT USED | 5

DETAIL NOT USED | 3

RECEIVED
SEP 06 2016

PLANS PREPARED FOR:

verizon ✓

PLANS PREPARED BY:

9900 West 109th Street, Suite 300
Overland Park, Kansas 66210
Phone: 913-438-7700
Fax: 913-438-7777
SSC

ENGINEERING LICENSE:

STATE OF KANSAS
PE CERTIFICATE OF AUTHORIZATION #C-
ENGINEER: PE #-

MLO	MICHAEL L. OWENS	STRUCTURAL/CIVIL	SC
KV	KEVIN VANHAELE	STRUCTURAL/CIVIL	SC
REJ	ROBERT E.	STRUCTURAL/CIVIL	SC
TMS	TERRANCE M. 9250	ELECTRICAL	E
SOK	SUNG 13654	ELECTRICAL	E

PRELIMINARY ISSUE

DRAWING NOTICE:

THIS DRAWING HAS NOT BEEN PUBLISHED AND IS THE SOLE PROPERTY OF SSC, INC. AND IS LENT TO THE BORROWER FOR THEIR CONFIDENTIAL USE ONLY, AND IN CONSIDERATION OF THE LOAN OF THIS DRAWING, THE BORROWER PROMISES AND AGREES TO RETURN IT UPON REQUEST AND AGREES THAT IT WILL NOT BE REPRODUCED, COPIED, LENT OR OTHERWISE DISPOSED OF DIRECTLY OR INDIRECTLY, NOR USED FOR ANY PURPOSE OTHER THAN FOR WHICH IT IS FURNISHED.

SUBMITTALS

DESCRIPTION	DATE	BY	REV
ISSUED FOR REVIEW	04/18/16	RKT	A
ISSUED FOR LESSOR REVIEW	06/06/16	RKT	B
PER CLIENT COMMENTS	06/23/16	RKT	C
PER CLIENT COMMENTS	08/08/16	RKT	D
ISSUED FOR REVIEW	09/06/16	GAA	E

SITE NAME:
KCYC
EDWARDSVILLE

SITE NUMBER:
300431

SITE ADDRESS:
NORTH FIFTH STREET
EDWARDSVILLE, KANSAS
66111

SHEET DESCRIPTION:
ELECTRICAL - DETAILS (1 OF 2)

SSC #: -

SHEET NUMBER: E-7

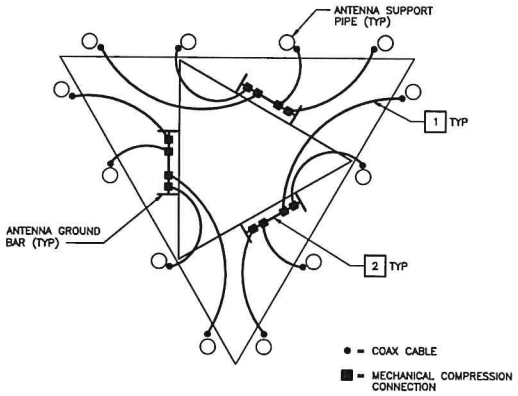

NOTES:

1. COAX GROUND KIT WIRES.
2. MOUNT TOWER GROUND BAR DIRECTLY TO TOWER WITHOUT ISOLATION BUSHINGS. CONTRACTOR TO REMOVE TOWER GALVANIZED COATING WHERE GROUND BAR COMES INTO CONTACT WITH TOWER. SUPPLY AND INSTALL COLD GALVANIZING TO TOWER AND GROUND BAR CLAMPS AFTER INSTALLATION.

ANTENNA GROUNDING PLAN | 5

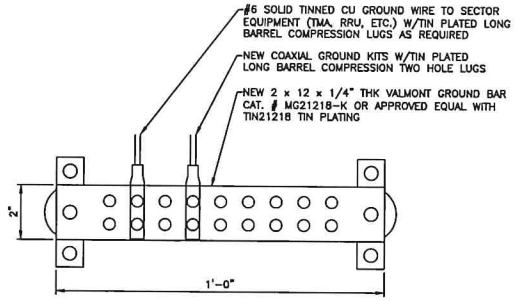

NOTES:

1. ALL HARDWARE SHALL BE 18-8 STAINLESS STEEL INCLUDING BELLVILLE WASHERS, COAT ALL SURFACES WITH KOPR-SHIELD BEFORE MATING.
2. FOR GROUND BOND TO STEEL ONLY: INSERT A TOOTH WASHER BETWEEN LUG AND STEEL, COAT ALL SURFACES WITH KOPR-SHIELD.
3. USE A THIN COAT OF ANTI-CORROSION GREASE AT THESE CONNECTIONS.
4. INSTALL WITHIN 12" OF END OF COAX TO COAX JUMPER CONNECTION.
5. DIMPLE OR MECHANICAL CRIMP LUGS WILL NOT BE PERMITTED.

ANTENNA GROUND BAR (ONE PER SECTOR) | 3

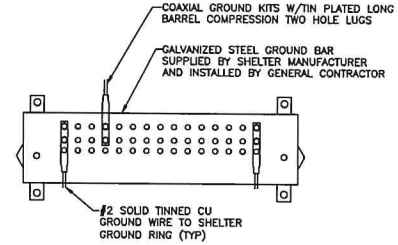

NOTES:

1. ALL HARDWARE SHALL BE 18-8 STAINLESS STEEL INCLUDING BELLVILLE WASHERS. COAT ALL SURFACES WITH KOPR-SHIELD BEFORE MATING.
2. FOR GROUND BOND TO STEEL ONLY: INSERT A TOOTH WASHER BETWEEN LUG AND STEEL, COAT ALL SURFACES WITH KOPR-SHIELD.
3. CONTRACTOR TO USE A THIN COAT OF ANTI-CORROSION GREASE AT THESE CONNECTIONS.
4. INSTALL 12" BELOW THE BOTTOM OF COAX ENTRY PORT.
5. DIMPLE OR MECHANICAL CRIMP LUGS WILL NOT BE PERMITTED.

GROUND BAR | 1

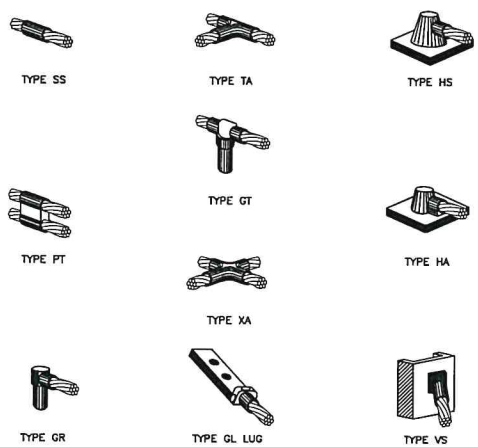

CADWELD DETAILS | 6

DETAIL NOT USED | 4

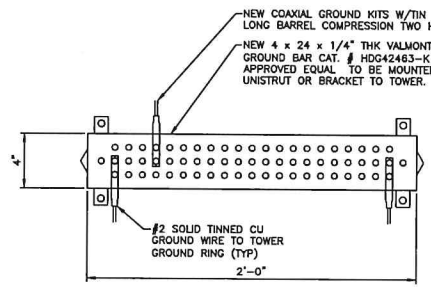

NOTES:

1. ALL HARDWARE SHALL BE 18-8 STAINLESS STEEL INCLUDING BELLVILLE WASHERS, COAT ALL SURFACES WITH KOPR-SHIELD BEFORE MATING.
2. FOR GROUND BOND TO STEEL ONLY: INSERT A TOOTH WASHER BETWEEN LUG AND STEEL, COAT ALL SURFACES WITH KOPR-SHIELD.
3. USE A THIN COAT OF ANTI-CORROSION GREASE AT THESE CONNECTIONS.
4. INSTALL NO GREATER THAN 36" BELOW ICE BRIDGE.
5. DIMPLE OR MECHANICAL CRIMP LUGS WILL NOT BE PERMITTED.

TOWER/TYPICAL GROUND BAR | 2

RECEIVED
SEP 06 2016

PLANS PREPARED FOR:

verizon ✓

PLANS PREPARED BY:

9900 West 109th Street, Suite 300
Overland Park, Kansas 66210
Phone: 913-438-7700
Fax: 913-438-7777
SSC

ENGINEERING LICENSE:

STATE OF KANSAS
PE CERTIFICATE OF AUTHORIZATION #E-
ENGINEER: PE #

MLO	MICHAEL L. OWENS	STRUCTURAL/CIVIL	SC
KV	KEVIN VANMAELE	STRUCTURAL/CIVIL	SC
REJ	ROBERT E.	STRUCTURAL/CIVIL	SC
TMS	TERR	ELECTRICAL	E
SDK	SU	ELECTRICAL	E

PRELIMINARY ISSUE

DRAWING NOTICE:

THIS DRAWING HAS NOT BEEN PUBLISHED AND IS THE SOLE PROPERTY OF SSC, INC. AND IS LENT TO THE BORROWER FOR THEIR CONFIDENTIAL USE ONLY, AND IN CONSIDERATION OF THE LOAN OF THIS DRAWING, THE BORROWER PROMISES AND AGREES TO RETURN IT UPON REQUEST AND AGREES THAT IT WILL NOT BE REPRODUCED, COPIED, LENT OR OTHERWISE DISPOSED OF DIRECTLY OR INDIRECTLY, NOR USED FOR ANY PURPOSE OTHER THAN FOR WHICH IT IS FURNISHED.

SUBMITTALS

DESCRIPTION	DATE	BY	REV
ISSUED FOR REVIEW	04/19/16	RKT	A
ISSUED FOR LESSOR REVIEW	06/06/16	RKT	B
PER CLIENT COMMENTS	06/23/16	RKT	C
PER CLIENT COMMENTS	08/08/16	RKT	D
ISSUED FOR REVIEW	09/06/16	GAA	E

SITE NAME:

KCYC
EDWARDSVILLE

SITE NUMBER:

300431

SITE ADDRESS:

NORTH FIFTH STREET
EDWARDSVILLE, KANSAS
66111

SHEET DESCRIPTION:

ELECTRICAL - DETAILS (2 OF 2)

SSC #: -

SHEET NUMBER: E-8

SYMBOLS

SCHEMATIC SYMBOLS

- GROUND
- TRANSFORMER
- BREAKER (SIZE AS NOTED)
- METER
- FUSED DISCONNECT SWITCH (SIZED AS NOTED)
- NON-FUSED DISCONNECT SWITCH (SIZED AS NOTED)
- DUPLEX RECEPTACLE (120V)
- GENERATOR RECEPTACLE (240V, 1ø)
- ENCLOSURES

DETAIL NUMBER

DRAWING NUMBER ON WHICH SECTION OR DETAIL APPEARS. (–) INDICATES REFERENCED FROM SAME DRAWING

SECTION NUMBER

DRAWING NUMBER ON WHICH SECTION OR DETAIL APPEARS. (–) INDICATES REFERENCED FROM SAME DRAWING

PLAN SYMBOLS

- CONDUIT RUN ABOVEGROUND
- CONDUIT RUN UNDERGROUND
- CONDUIT CAP
- NEUTRAL CONDUCTOR
- HASH MARKS INDICATE NUMBER OF WIRES IN CONDUIT
- GROUND CONDUCTOR
- DISCONNECT SWITCH
- $3 LIGHT SWITCH (3) INDICATES (3) WAY SWITCH
- LIGHT FIXTURE (TYPE ON DRAWING)
- LIGHT FIXTURE (TYPE ON DRAWING)
- RECEPTACLE
  GFCI – GROUND FAULT CIRCUIT INTERRUPTER
  WP – WEATHERPROOF COVER

GROUNDING PLAN SYMBOLS

- GROUNDING CONDUCTOR ABOVE GROUND
- GROUNDING CONDUCTOR UNDER GROUND
- GND BUS / GND COND — GROUND BUS WITH COMPRESSION CONNECTION
- CADWELD CONNECTION
- MECHANICAL CONNECTION
- GROUND ROD
- GROUND INSPECTION / TESTWELL

GENERAL NOTES

1. THE CONTRACTOR SHALL SUPERVISE AND DIRECT ALL WORK USING HIS BEST SKILL AND ATTENTION. THE CONTRACTOR SHALL BE SOLELY RESPONSIBLE FOR ALL CONSTRUCTION MEANS, METHODS, TECHNIQUES, PROCEDURES AND SEQUENCES FOR COORDINATING ALL PORTIONS OF THE WORK UNDER THE CONTRACT.

2. THE CONTRACTOR SHALL VISIT THE JOB SITE TO REVIEW THE SCOPE OF WORK AND EXISTING CONDITIONS INCLUDING, BUT NOT LIMITED TO ELECTRICAL SERVICE AND OVERALL COORDINATION.

3. THE CONTRACTOR SHALL VERIFY ALL EXISTING CONDITIONS AND DIMENSIONS PRIOR TO SUBMITTING HIS BID. ANY DISCREPANCIES, CONFLICTS OR OMISSIONS, ETC. SHALL BE REPORTED TO VERIZON WIRELESS BEFORE PROCEEDING WITH THE WORK.

4. THE CONTRACTOR SHALL PROTECT ALL AREAS FROM DAMAGE WHICH MAY OCCUR DURING CONSTRUCTION. ANY DAMAGE TO NEW AND EXISTING CONSTRUCTION, STRUCTURE, OR EQUIPMENT SHALL BE IMMEDIATELY REPAIRED OR REPLACED TO THE SATISFACTION OF VERIZON WIRELESS, AT THE EXPENSE OF THE CONTRACTOR.

5. THE CONTRACTOR SHALL SAFEGUARD THE OWNER'S PROPERTY DURING CONSTRUCTION AND SHALL REPLACE ANY DAMAGED PROPERTY OF THE OWNER TO ORIGINAL CONDITION.

6. IT SHALL BE THE RESPONSIBILITY OF THE CONTRACTOR TO LOCATE ALL EXISTING UTILITIES WHETHER SHOWN HEREON OR NOT, AND TO PROTECT THEM FROM DAMAGE. THE CONTRACTOR SHALL BEAR ALL EXPENSES FOR REPAIR OR REPLACEMENT OF UTILITIES OR OTHER PROPERTY DAMAGED IN CONJUNCTION WITH THE EXECUTION OF WORK.

7. THE CONTRACTOR SHALL BE RESPONSIBLE FOR THE COMPLETE SECURITY OF THE SITE WHILE THE JOB IS IN PROGRESS AND UNTIL THE JOB IS COMPLETE.

8. ALL CONSTRUCTION WORK SHALL CONFORM TO THE U.B.C., I.B.C., OR B.O.C.A. AND ALL APPLICABLE LOCAL REGULATIONS, ORDINANCES, STATUTES & CODES.

9. VERIZON WIRELESS SHALL OBTAIN THE CONSTRUCTION PERMIT. THE CONTRACTOR SHALL OBTAIN AND PAY FOR ADDITIONAL PERMITS, LICENSES AND INSPECTIONS NECESSARY FOR PERFORMANCE OF THE WORK AND INCLUDE THOSE IN THE COST OF THE WORK TO THE OWNER.

10. CITY APPROVED PLANS SHALL BE KEPT IN A PLAN BOX AND SHALL NOT BE USED BY WORKMEN. ALL CONSTRUCTION SETS SHALL REFLECT SAME INFORMATION. THE CONTRACTOR SHALL ALSO MAINTAIN IN GOOD CONDITION ONE COMPLETE SET OF PLANS WITH ALL REVISIONS, ADDENDA AND CHANGE ORDERS ON THE PREMISES AT ALL TIMES. THESE ARE TO BE UNDER THE CARE OF JOB SUPERINTENDENT.

11. PROVIDE A PORTABLE FIRE EXTINGUISHER WITH A RATING OF NOT LESS THAN 2–A OR 2–A:10–B:C WITHIN 75 FEET OF TRAVEL DISTANCE TO ALL PORTIONS OF THE BUILD OUT AREA DURING CONSTRUCTION.

12. ANY CONNECTION FEES FOR ELECTRICAL SERVICE SHALL BE PAID BY THE CONTRACTOR.

13. BUILDING CODE: (IBC)
[INTERNATIONAL BUILDING CODE (IBC), AS PUBLISHED BY THE INTERNATIONAL CODE COUNCIL (ICC) AND AS ADOPTED BY LOCAL BUILDING AUTHORITY]

14. NATIONAL ELECTRICAL CODE: (NEC)
[NATIONAL FIRE PROTECTION ASSOCIATION (NFPA) 70, NATIONAL ELECTRICAL CODE, AS ADOPTED BY LOCAL BUILDING AUTHORITY]

15. CABLING NOTE – FOLLOW HYBRIFLEX MANUFACTURER'S RECOMMENDATIONS FOR HOISTING CABLE. VERIZON WIRELESS HAS REPORTED THAT HOIST GRIPS MUST BE USED EVERY 200' OF CABLE.

16. CONSTRUCTION TYPE IIB.
OCCUPANCY GROUP U.

DESCRIPTION OF PROPOSED SITE USE
THE CONSTRUCTION OF THIS COMMUNICATION TOWER SITE IS FOR THE TRANSMISSION AND RECEPTION OF CALLS FOR A NEW WIRELESS TELEPHONE SYSTEM. NO FLAMMABLE PRODUCTS OR CHEMICALS WILL BE USED OR STORED INSIDE THE SHELTER.

ABBREVIATIONS

AGL	ABOVE GRADE LINE	ELEV	ELEVATOR, ELEVATION	REQ'D	REQUIRED
AMP	AMPERE	EQ	EQUAL	SF	SQUARE FEET
ARCH	ARCHITECT	EQUIP	EQUIPMENT	SHT	SHEET
BLDG	BUILDING	EXIST	EXISTING	SIM	SIMILAR
CL	CENTER LINE	FND	FOUNDATION	SPECS	SPECIFICATIONS
CONC	CONCRETE	FTG	FOOTING	SSC, INC.	SELECTIVE SITE CONSULTANTS, INC.
CONST	CONSTRUCTION	GA	GAUGE	STD	STANDARD
CONTR	CONTRACTOR	GALV	GALVANIZED	STL	STEEL
DET	DETAIL	GND	GROUND	STRUCT	STRUCTURAL
DIA	DIAMETER	HT	HEIGHT	SW	SWITCH
DIAG	DIAGONAL	LF	LINEAL FEET	TOC	TOP OF CONCRETE
DIM	DIMENSION	MIN	MINIMUM	TC	TOP OF CURB
DN	DOWN	MISC	MISCELLANEOUS	TOP	TOP OF PAVING
DWG	DRAWING	NTS	NOT TO SCALE	TOS	TOP OF STEEL
EA	EACH	OC	ON CENTER	TYP	TYPICAL
ELEC	ELECTRICAL	PL	PLATE	UNO	UNLESS NOTED OTHERWISE

PLANS PREPARED FOR:

verizon ✓

PLANS PREPARED BY:

9900 West 109th Street, Suite 300
Overland Park, Kansas 66210
Phone: 913-438-7700
Fax: 913-438-7777
SSC

ENGINEERING LICENSE:

STATE OF KANSAS
PE CERTIFICATE OF AUTHORIZATION #C-
ENGINEER: PE #-

MLO	MICHAEL L. OWENS		STRUCTURAL/CIVIL	SC
KV	KEVIN VANMAE		STRUCTURAL/CIVIL	SC
REJ	ROBERT E	8998	STRUCTURAL/CIVIL	SC
TMS	TERRANCE	9250	ELECTRICAL	E
SDK	SU	13654	ELECTRICAL	E

PRELIMINARY ISSUE

DRAWING NOTICE:

THIS DRAWING HAS NOT BEEN PUBLISHED AND IS THE SOLE PROPERTY OF SSC, INC. AND IS LENT TO THE BORROWER FOR THEIR CONFIDENTIAL USE ONLY, AND IN CONSIDERATION OF THE LOAN OF THIS DRAWING THE BORROWER PROMISES AND AGREES TO RETURN IT UPON REQUEST AND AGREES THAT IT WILL NOT BE REPRODUCED, COPIED, LENT OR OTHERWISE DISPOSED OF DIRECTLY OR INDIRECTLY, NOR USED FOR ANY PURPOSE OTHER THAN FOR WHICH IT IS FURNISHED.

SUBMITTALS

DESCRIPTION	DATE	BY	REV
ISSUED FOR REVIEW	04/18/16	RKT	A
ISSUED FOR LESSOR REVIEW	06/06/16	RKT	B
PER CLIENT COMMENTS	06/23/16	RKT	C
PER CLIENT COMMENTS	08/08/16	RKT	D
ISSUED FOR REVIEW	09/06/16	GAA	E

SITE NAME:
KCYC
EDWARDSVILLE

SITE NUMBER:
300431

SITE ADDRESS:
NORTH FIFTH STREET
EDWARDSVILLE, KANSAS
66111

SHEET DESCRIPTION:
GENRAL NOTES

SSC #: -

SHEET NUMBER: GN-1

RECEIVED
SEP 06 2016

GENERAL REQUIREMENTS SECTION 01 10 00

PART 1 GENERAL

1.1 INTENT

A. THESE SPECIFICATIONS AND CONSTRUCTION DRAWINGS DESCRIBE THE WORK TO BE DONE AND THE MATERIALS TO BE FURNISHED FOR CONSTRUCTION. PLANS ARE NOT TO BE SCALED.

B. THE DRAWINGS AND SPECIFICATIONS ARE INTENDED TO BE FULLY EXPLANATORY AND SUPPLEMENTARY, HOWEVER, SHOULD ANYTHING BE SHOWN, INDICATED OR SPECIFIED ON ONE AND NOT THE OTHER, IT SHALL BE DONE THE SAME AS IF SHOWN, INDICATED OR SPECIFIED IN BOTH.

C. THE INTENTION OF DOCUMENTS IS TO INCLUDE ALL LABOR AND MATERIALS REASONABLY NECESSARY FOR THE PROPER EXECUTION AND COMPLETION OF THE WORK AS STIPULATED IN THE CONTRACT.

D. CONFLICTS: THE CONTRACTOR SHALL BE RESPONSIBLE FOR VERIFICATION OF ALL MEASUREMENTS AT THE SITE BEFORE ORDERING MATERIALS OR DOING ANY WORK. NO COMPENSATION SHALL BE ALLOWED DUE TO DIFFERENCE BETWEEN ACTUAL DIMENSIONS AND THOSE ON THE DOCUMENTS. ANY DISCREPANCY SHALL BE REPORTED TO THE OWNER OR HIS AGENT FOR CONSIDERATION.

1.2 LICENSING REQUIREMENTS: THE CONTRACTOR IS RESPONSIBLE FOR PROCUREMENT AND MAINTAINING ALL APPLICABLE LICENSES AND BONDS.

1.3 STORAGE: ALL MATERIALS MUST BE STORED IN A LEVEL AND DRY FASHION THAT DOES NOT OBSTRUCT THE FLOW OF OTHER WORK. ANY STORAGE METHOD MUST MEET ALL RECOMMENDATIONS OF THE ASSOCIATED MANUFACTURER.

1.4 CLEAN UP: THE CONTRACTOR SHALL KEEP THE SITE FREE FROM ACCUMULATION OF WASTE MATERIALS OR RUBBISH AT ALL TIMES.

1.5 QUALITY ASSURANCE: ALL WORK SHALL BE IN ACCORDANCE WITH APPLICABLE LOCAL, STATE, AND FEDERAL REGULATIONS.

PART 2 PRODUCTS – NOT APPLICABLE TO THIS SECTION

PART 3 EXECUTION – NOT APPLICABLE TO THIS SECTION

END OF SECTION

CAST–IN–PLACE–CONCRETE SECTION 03 30 00

PART 1 GENERAL

1.1 SUMMARY

FURNISH AND INSTALL ALL CAST–IN–PLACE CONCRETE, REINFORCING AND ACCESSORIES, AS SPECIFIED HEREIN AND AS SHOWN ON THE DRAWINGS.

1.2 SUBMITTALS

A. PRODUCT DATA: SUBMIT MANUFACTURER'S PRODUCT DATA AND INSTALLATION INSTRUCTIONS FOR EACH MATERIAL AND PRODUCT USED.

B. SHOP DRAWINGS: SUBMIT SHOP DRAWINGS INDICATING MATERIAL CHARACTERISTICS, DETAILS OF CONSTRUCTION, CONNECTIONS, AND RELATIONSHIP WITH ADJACENT CONSTRUCTION.

SHOP DRAWINGS SHALL BE PREPARED AND STAMPED BY A QUALIFIED ENGINEER LICENSED IN THE JURISDICTION OF THE PROJECT.

C. MIX DESIGN: SUBMIT FOR APPROVAL MIX DESIGN PROPOSED FOR USE.

1.3 QUALITY ASSURANCE

A. COMPLY WITH GOVERNING CODES AND REGULATIONS. PROVIDE PRODUCTS OF ACCEPTABLE MANUFACTURERS, WHICH HAVE BEEN IN SATISFACTORY USE IN SIMILAR SERVICE FOR A MINIMUM OF THREE YEARS. USE EXPERIENCED INSTALLERS. DELIVER, HANDLE, STORE MATERIALS IN ACCORDANCE WITH MANUFACTURER'S INSTRUCTIONS.

B. TESTING: EMPLOY AN INDEPENDENT TESTING AGENCY ACCEPTABLE TO OWNER TO DESIGN CONCRETE MIXES AND TO PERFORM MATERIAL EVALUATION TESTS. PROVIDE 4 AND 28 DAY CYLINDER TESTS. COMPLY WITH ASTM C 143, C 173, C 31 AND C 39.

C. STANDARDS

1. ACI 301, SPECIFICATIONS FOR STRUCTURAL CONCRETE FOR BUILDINGS.

2. ACI 318, BUILDING CODE REQUIREMENTS FOR REINFORCED CONCRETE, AND CRSI MANUAL OF STANDARD PRACTICE.

PART 2 PRODUCTS

2.1 MATERIALS

A. MATERIALS SHALL CONFORM TO THE RESPECTIVE PUBLICATIONS AND OTHER REQUIREMENTS SPECIFIED HEREIN.

B. CEMENT: CEMENT SHALL CONFORM TO ASTM C150, TYPE 1. CEMENT MAY BE BAGGED OR BULK. CEMENT SHALL BE USED FORM ONLY ONE MILL THROUGHOUT PROJECT.

C. FINE AGGREGATE: FINE AGGREGATE SHALL CONFORM TO ASTM C33–08 AND SHALL BE UNIFORMLY GRADED, CLEAN, SHARP, WASHED MATERIAL OR CRUSHED SAND, FREE FROM ORGANIC IMPURITIES.

D. COURSE AGGREGATE: COURSE AGGREGATE SHALL CONFORM TO ASTM C33–08 AND SHALL BE NATURAL WASHED GRAVEL OR WASHED CRUSHED ROCK HAVING HARD, STRONG, DURABLE PIECES, FREE FORM ADHERENT COATINGS, THE MAXIMUM SIZE OF COARSE AGGREGATE SHALL BE 3/4" IN ACCORDANCE WITH THE REQUIREMENTS OF ASTM C33–08; GRADATION SIZE NO. 67.

E. WATER: WATER USED IN THE CONCRETE MIX SHALL BE POTABLE, CLEAN, AND FREE FROM OILS, ACIDS, SALTS, CHLORIDES, ALKALI, SUGAR, VEGETABLE, OR OTHER INJURIOUS SUBSTANCES.

F. REINFORCING STEEL: ALL BARS ARE TO BE NEW BILLET STEEL CONFORMING TO ASTM A615, GRADE 60. BENDING DETAILS RE TO CONFORM TO THE STANDARDS OF ACI 318.

G. FORMS: THE FORMS SHALL BE TRUE AND RIGID AND CONFORM TO SHAPE, LINE AND DIMENSIONS AS SHOWN ON THE DRAWINGS. ALL FORMS SHALL BE RIGIDLY CONSTRUCTED, BRACED AND TIED TO PREVENTS ANY DEFLECTION OR DISPLACEMENT DURING PLACING OF CONCRETE. ALL EXPOSED CORNERS AND EDGES SHALL HAVE 3/4" FILLETS. ALL JOINTS SHALL BE MORTAR TIGHT; OPEN JOINTS SHALL BE SEALED AS REQUIRED.

H. CONCRETE:

1. PROPORTIONING: CONCRETE SHALL CONFORM TO THE FOLLOWING:

a. CEMENT–6 SACKS PER CUBIC YARD, MINIMUM

b. WATER SHALL BE KEPT TO AN ABSOLUTE MINIMUM TO MAINTAIN SLUMP AS SPECIFIED

c. AGGREGATE; SAND FACTOR SHALL BE AS REQUIRED TO GIVE THE BEST WORKABLE MIX WITHIN THE RANGE OF 46 TO 52 PERCENT OF TOTAL AGGREGATE.

d. STRENGTH–4,000 PSI AT 28 DAYS, UNLESS NOTED OTHERWISE

e. ALL CONCRETE SHALL CONTAIN A WATER–REDUCING AGENT AND SHALL HAVE THREE (3) TO FIVE (5) PERCENT ENTRAINED AIR.

2.2 SLUMP:

A. THE MAXIMUM SLUMP SHALL NOT EXCEED 3" EXCEPT FOR CONCRETE TO BE PLACED IN FORMS 8" WIDE OR LESS, WHERE THE MAXIMUM SLUMP SHALL BE 4".

B. THE DETERMINATION OF SLUMP SHALL CONFORM TO ASTM C143.

2.3 MIXING:

THE CONTRACTOR SHALL USE READY–MIXED CONCRETE, MIXED AND DELIVERED IN CONFORMANCE WITH ASTM C94.

2.4 MIXTURES:

A. THE CONCRETE SHALL CONTAIN AND AIR–ENTRAINING ADMIXTURE COMPLYING WITH THE REQUIREMENTS OF ASTM C–260 AND ACI 212.1R AND A WATER–REDUCING ADMIXTURE COMPLYING WITH THE REQUIREMENTS OF ASTM C–494 AND ACI 212.1R. ADMIXTURES SHALL BE PURCHASE AND BATCHED IN LIQUID SOLUTION. THE USE OF CALCIUM CHLORIDE OR AN ADMIXTURE CONTAINING CALCIUM CHLORIDE IS PROHIBITED.

B. ADMIXTURES SHALL BE OF THE SAME MANUFACTURER TO ASSURE COMPATIBILITY.

C. ACCEPTABLE MANUFACTURERS ARE:

1. W.R. GRACE
2. SIKA GROUP
3. MASTER BUILDERS
4. EUCLID CHEMICAL CO

2.5 CURING COMPOUNDS

CURING COMPOUNDS SHALL CONFORM TO ASTM C309, TYPE 1, ID, CLASS A AND B AND ASTM C171 AS APPLICABLE

PART 3 EXECUTION

3.1 GENERAL

A. CONSTRUCT AND ERECT FORMWORK IN ACCORDANCE WITH ACI 301 ACI 347.

B. COLD–WEATHER CONCRETING SHALL BE IN ACCORDANCE WITH ACI 306.

C. HOT–WEATHER CONCRETING SHALL BE IN ACCORDANCE WITH ACI 305.

3.2 INSERTS, EMBEDDED COMPONENTS AND OPENINGS

A. CONTRACTOR SHALL CHECK ALL CIVIL, ARCHITECTURAL, STRUCTURAL, AND ELECTRICAL DRAWINGS FOR OPENINGS, SLEEVES, ANCHOR BOLTS, INSERTS AND OTHER ITEMS TO BE BUILT INTO THE CONCRETE WORK.

B. COORDINATE THE WORK OF OTHER SECTIONS IN FORMING AND SETTING OPENINGS, RECESSES, SLOTS, CHASES, ANCHORS, INSERTS AND OTHER ITEMS TO BE EMBEDDED.

C. EMBEDDED ITEMS SHALL BE SET ACCURATELY IN LOCATION, ALIGNMENT, ELEVATION, AND PLUMBNESS. LOCATE AND MEASURE FROM ESTABLISHED SURVEYED REFERENCE BENCHMARKS.

D. EMBEDDED ITEMS SHALL BE ANCHORED INTO PLACE AS REQUIRED TO PREVENT MOVEMENT DURING CONCRETE PLACEMENT AND CONSOLIDATION. COMPONENTS FORMING A PART OF A COMPLETE ASSEMBLY SHALL BE ALIGNED BEFORE ANCHORING. PROVIDE TEMPORARY BRACING, ANCHORAGE, AND TEMPLATES AS REQUIRED TO MAINTAIN THE SETTING AND ALIGNMENT.

3.3 REINFORCEMENT PLACEMENT:

A. REINFORCEMENT SHALL BE PLACED IN ACCORDANCE WITH CHECKED AND RELEASED DRAWINGS AND ACI 301 AND ACI 315; SECURELY WIRE–TIE REINFORCEMENT AT ALL INTERSECTIONS.

B. ACCURATELY POSITION, SUPPORT AND SECURE REINFORCEMENT AGAINST DISPLACEMENT FROM FORMWORK CONSTRUCTION OR CONCRETE PLACEMENT AND CONSOLIDATION. REINFORCING SHALL BE SUPPORTED ON METAL CHAIRS, RUNNERS, BOLSTERS, SPACERS, AND HANGERS.

C. SPLICES OF REINFORCING BARS SHALL BE CLASS B UNLESS SHOWN OTHERWISE. SPLICES SHALL BE STAGGERED. FULL DEVELOPMENT LENGTH SHALL BE PROVIDED ACROSS JOINTS.

D. LOCATE REINFORCING TO PROVIDE CONCRETE COVER AND SPACING SHOWN ON THE DRAWINGS. MINIMUM COVER SHALL BE AS REQUIRED BY ACI 318.

E. WELDING OF AND TO ANY REINFORCING MATERIALS INCLUDING TACK WELDING OF CROSSING BARS IS STRICTLY PROHIBITED. BARS SHALL BE FREE OF FLAKEY OR SCALEY RUST AT THE TIME THE CONCRETE IS PLACED.

3.4 CONCRETE PLACEMENT:

A. PRIOR TO PLACING CONCRETE, FORMS AND REINFORCEMENT SHALL BE THOROUGHLY INSPECTED. ALL WOOD CHIPS, DIRT, ETC., AS WELL AS ALL TEMPORARY BRACING, TIES, AND CLEATS REMOVED, AND ALL OPENINGS FOR UTILITIES PROPERLY BOXED, ALL FORMS SHALL BE PROPERLY SECURED IN THEIR CORRECT POSITION AND MADE TIGHT. ALL REINFORCING AND EMBEDDED ITEMS SHALL BE SECURED IN THEIR PROPER LOCATIONS.. ALL OLD AND DRY CONCRETE AN DIRT SHALL BE CLEANED AND ALL STANDING WATER AND OTHER FOREIGN MATTER REMOVED.

B. PLACING CONCRETE SHALL BE IN ACCORDANCE WITH ACI 301 AND ACI 304 AND SHALL BE CARRIED OUT AT SUCH A RATE THAT THE CONCRETE PREVIOUSLY PLACED IS STILL PLASTIC AND INTEGRATED WITH THE FRESHLY PLACE CONCRETE. CONCRETING, ONCE STARTED, SHALL BE CARRIED ON AS A CONTINUOUS OPERATION UNTIL THE SECTION IS COMPLETED. NO COLD JOINTS SHALL BE ALLOWED.

C. CONSTRUCTION JOINTS: USE KEYWAYS, CONTINUE REINFORCEMENT THROUGH JOINT.

D. EXPANSION JOINTS: FOR EXTERIOR WORK, LOCATE AT 30' O.C. MAXIMUM, AT APPROVED LOCATIONS. PROVIDE SMOOTH DOWELS ACROSS JOINT WHICH PERMIT 1" HORIZONTAL MOVEMENT AND NO VERTICAL SHEAR MOVEMENT.

E. ISOLATION JOINTS: PROVIDE BETWEEN SLABS AND VERTICAL ELEMENTS SUCH AS COLUMNS AND STRUCTURAL WALLS.

F. CONTROL JOINTS: PROVIDE SAWN OR TOOLED JOINTS OR REMOVABLE INSERT STRIPS; DEPTH EQUAL TO 1/4" SLAB THICKNESS. SPACING SHALL BE AS REQUIRED AND APPROVED.

G. ALL CONCRETE SHALL BE THOROUGHLY CONSOLIDATED AND COMPACTED BY VIBRATION, SPADING, RODDING, OR FORKING DURING THE OPERATION OF PLACING AND DEPOSITING IN ACCORDANCE WITH ACI 309. THE CONCRETE SHALL BE WORKED AROUND REINFORCEMENT, EMBEDDED ITEMS, AND INTO THE CORNERS OF THE FORMS SO AS TO ELIMINATE ALL AIR AND STONE POCKETS.

3.5 FINISHING:

A. FINISHING OF ALL SLABS SHALL BE IN ACCORDANCE WITH ACI 302.1; SECTION 7.2 WITH A MINIMUM OF THREE TROWELINGS.

1. INTERIOR SLAB FINISH TOLERANCE AS MEASURED IN ACCORDANCE WITH ASTM E 1155 SHALL HAVE AN OVERALL TEST F NUMBER FOR FLATNESS, FF=20 AND FOR LEVEL, FL=15. THE MINIMUM LOCAL NUMBER FOR FLATNESS, FF=15 AND FOR LEVEL, FL=10.

2. EXTERIOR SLAB FINISH SHALL BE FLAT (FF=20) AND SHALL BE SLOPED A MINIMUM OF 1/8" PER FOOT TO A MAXIMUM OF 1/4" PER FOOT TO PREVENT PONDING WATER.

B. SURFACES OF SLABS SHALL RECEIVE TWO COATS OF CLEAR SEALER/HARDNER.

C. ABOVE GRADE WALL SURFACES SHALL HAVE A SMOOTH FORM FINISH AS DEFINED IN CHAPTER 10 OF ACI 301.

3.6 CURING:

A. FRESHLY DEPOSITED CONCRETE SHALL BE PROTECTED FROM PREMATURE DRYING AND EXCESSIVELY HOT OR COLD TEMPERATURES AND SHALL BE MAINTAINED WITH MINIMAL MOISTURE LOSS AT A RELATIVELY CONSTANT TEMPERATURE FOR A PERIOD OF TIME NECESSARY FOR THE HYDRATION OF THE CEMENT AND PROPER HARDENING OF THE CONCRETE.

B. CURING SHALL IMMEDIATELY FOLLOW THE FINISH OPERATION. CONCRETE SHALL BE KEPT CONTINUOUSLY MOIST ATE LEAST OVERNIGHT, IMMEDIATELY FOLLOWING THE INITIAL CURING. BEFORE THE CONCRETE HAS DRIED, ADDITIONAL CURING SHALL BE ACCOMPLISHED BY ONE OF THE FOLLOWING MATERIALS OR METHODS:

1. PONDING OR CONTINUOUS SPRINKLING

2. ABSORPTIVE MAT OR FABRIC KEPT CONTINUOUSLY WET

3. NON–ABSORPTIVE FILM (POLYETHYLENE) OVER A PREVIOUSLY SPRINKLED SURFACE

4. SAND OR OTHER COVERING KEPT CONTINUOUSLY WET

5. CONTINUOUS STEAM (NOT EXCEEDING 150 DEGREES F) OR VAPOR MIST BATH.

6. SPRAYED–ON CURING COMPOUND APPLIED IN TWO COATES, SPRAYED IN PERPENDICULAR DIRECTIONS.

C. THE FINAL CURING SHALL CONTINUE UNTIL THE CUMULATIVE NUMBER OF DAYS OR FRACTION THEREOF, NOT NECESSARILY CONSECUTIVE, DURING WHICH TEMPERATURE OF THE AIR IN CONTACT WITH CONCRETE IS ABOVE 50 F HAS TOTALED SEVEN (7) DAYS. CONCRETE SHALL NOT BE PERMITTED TO FREEZE DURING THE CURING PERIOD. RAPID DRYING AT THE END OF THE CURING PERIOD SHALL BE PREVENTED.

END OF SECTION

RECEIVED
SEP 06 2016

PLANS PREPARED FOR:

verizon✓

PLANS PREPARED BY:

SSC
9900 West 109th Street, Suite 300
Overland Park, Kansas 66210
Phone: 913-438-7700
Fax: 913-438-7777

ENGINEERING LICENSE:

STATE OF KANSAS
PE CERTIFICATE OF AUTHORIZATION #E-
ENGINEER: PE #
MLO MICHAEL L. OWENS STRUCTURAL/CIVIL SC
KV KEVIN VANMAELE STRUCTURAL/CIVIL SC
REJ ROBERT E. STRUCTURAL/CIVIL SC
TMS TERRA 9250 ELECTRICAL E
SDK 3654 ELECTRICAL E

PRELIMINARY ISSUE

DRAWING NOTICE:

THIS DRAWING HAS NOT BEEN PUBLISHED AND IS THE SOLE PROPERTY OF SSC, INC. AND IS LENT TO THE BORROWER FOR THEIR CONFIDENTIAL USE ONLY, AND IN CONSIDERATION OF THE LOAN OF THIS DRAWING, THE BORROWER PROMISES AND AGREES TO RETURN IT UPON REQUEST AND AGREES THAT IT WILL NOT BE REPRODUCED, COPIED, LENT OR OTHERWISE DISPOSED OF DIRECTLY OR INDIRECTLY, NOR USED FOR ANY PURPOSE OTHER THAN FOR WHICH IT IS FURNISHED.

SUBMITTALS

DESCRIPTION	DATE	BY	REV
ISSUED FOR REVIEW	04/18/16	RKT	A
ISSUED FOR LESSOR REVIEW	06/06/16	RKT	B
PER CLIENT COMMENTS	06/23/16	RKT	C
PER CLIENT COMMENTS	08/08/16	RKT	D
ISSUED FOR REVIEW	09/06/16	GAA	E

SITE NAME:
KCYC
EDWARDSVILLE

SITE NUMBER:
300431

SITE ADDRESS:
NORTH FIFTH STREET
EDWARDSVILLE, KANSAS
66111

SHEET DESCRIPTION:
SPECIFICATIONS
(1 OF 8)

SSC #: -

SHEET NUMBER:
SP-1

UNIT MASONRY SECTION 04 20 00

PART 1 GENERAL

1.1 SUMMARY

A. PROVIDE UNIT MASONRY CONSTRUCTION AS INDICATED ON THE DRAWINGS.

PART 2 PRODUCTS

2.1 MATERIALS

A. CLAY MASONRY UNITS:

1. APPLICATION: BRICK AND CONCRETE BLOCK CAVITY WALLS.

2. SIZE: STANDARD MODULAR, 3-5/8 INCHES THICK BY 2-1/4 INCHES HIGH BY 7-5/8 INCHES LONG OR AS INDICATED ON DRAWINGS.

3. TYPE: ASTM C 216, TYPE FBS, FOR GENERAL EXPOSED USE, OR AS INDICATED ON DRAWINGS. GRADE SHALL BE SW, UNLESS NOTED OTHERWISE ON DRAWINGS.

4. SPECIAL SHAPES: AS REQUIRED BY BUILDING CONFIGURATION. OR AS INDICATED ON DRAWINGS

5. BOND PATTERN: RUNNING BOND

B. CONCRETE MASONRY UNITS:

1. CONCRETE MASONRY UNITS: HOLLOW, LOAD-BEARING, NORMAL WEIGHT, ASTM C 90, GRADE N, TYPE 1. 1500 F'M COMPRESSIVE STRENGTH:

MEDIUM WEIGHT

2. SIZE: 7-5/8 " HIGH BY 15-5/8 LONG BY EITHER 7-5/8" OR 11-5/8" THICK OR AS INDICATED ON DRAWINGS.

3. SPECIAL SHAPES: AS REQUIRED BY BUILDING CONFIGURATION.

4. BOND PATTERN: RUNNING BOND UNLESS NOTED OR SHOWN DIFFERENTLY ON DRAWINGS.

C. LIMESTONE / PRECAST TRIM UNITS:

1. GRADE AND COLOR: AS SHOWN ON DRAWINGS

2. FINISH: AS IDENTIFIED ON DRAWINGS

D. MORTAR AND GROUT FOR BRICK AND CONCRETE MASONRY UNIT ASSEMBLIES:

1. MORTAR MIX: ASTM C 270, TYPE S, FOR REINFORCED MASONRY, MASONRY BELOW GRADE AND MASONRY IN CONTACT WITH EARTH AND ASTM C 270, TYPE N, FOR ABOVE-GRADE LOADBEARING AND NONLOADBEARING WALLS. PORTLAND CEMENT SHALL CONFORM TO ASTM C150, TYPE 1. MASONRY CEMENT SHALL CONFORM TO ASTM C91. FINE AGGREGATE SHALL CONFORM TO ASTM C144.

2. MORTAR COLOR: NATURAL COLOR UNLESS NOTED OTHERWISE ON DRAWINGS.

3. GROUT: ALL GROUT FOR FILLING BOND BEAMS AND REINFORCED CELLS SHALL CONFORM TO NON-AIR ENTRAINED GROUT PER ASTM C476 WITH PORTLAND CEMENT PER ASTM C150, TYPE 1, AND INE AND COARSE AGGREGATE PER ASTM C404.

E. REINFORCING STEEL: 1. REINFORCING BARS: ASTM A 615, GRADE 60. 2. WELDED WIRE FABRIC: ASTM A 185, PLAIN.

F. REINFORCING: WELDED WIRE WITH DEFORMED SIDE RODS.

1. STEEL WIRE: 9 GAUGE (.1875 INCH) GALVANIZED STEEL.

2. TRUSS TYPE

G. TIES AND ANCHORS:

1. BENT WIRE TIES: GALVANIZED STEEL.

2. RIGID ANCHORS: GALVANIZED STEEL STRAPS.

PART 3 EXECUTION

3.1 INSTALLATION

A. INSTALLATION OF MASONRY ASSEMBLIES:

1. COMPLY WITH PCA RECOMMENDED PRACTICES FOR LAYING CONCRETE BLOCK, BRICK INSTITUTE OF AMERICA BIA TECH NOTES, AND NCMA TEK BULLETINS.

2. COMPLY WITH COLD WEATHER AND WARM WEATHER PROTECTION PROCEDURES AS RECOMMENDED IN BIA TECH NOTES.

END OF SECTION

STRUCTURAL STEEL FRAMING SECTION 05 12 00

PART 1 GENERAL

1.1 SUMMARY

PROVIDE STRUCTURAL STEEL ASSEMBLIES, FABRICATIONS, AND ERECTION OF STEEL AND OTHER ITEMS AS SHOWN ON THE DRAWINGS OR REQUIRED FOR A COMPLETE INSTALLATION.

1.2 QUALITY ASSURANCE

A. COMPLY WITH ALL APPLICABLE GOVERNING CODES AND REGULATIONS. PROVIDE PRODUCTS OF ACCEPTABLE MANUFACTURERS, WHICH HAVE BEEN IN SATISFACTORY USE IN SIMILAR SERVICE FOR THREE YEARS. USE EXPERIENCED INSTALLERS. DELIVER, HANDLE, AND STORE MATERIALS IN ACCORDANCE WITH MANUFACTURER'S INSTRUCTIONS.

B. STANDARDS: AISC, CODE OF STANDARD PRACTICE FOR STEEL BUILDINGS AND BRIDGES, AND APPLICABLE REGULATIONS.

C. ARCHITECTURALLY EXPOSED STRUCTURAL STEEL: COMPLY WITH FABRICATION REQUIREMENTS, INCLUDING TOLERANCE LIMITS, AND INSTALLATION TOLERANCES OF AISC'S "CODE OF STANDARD PRACTICE FOR STEEL BUILDINGS AND BRIDGES" FOR STRUCTURAL STEEL.

D. ERECTION TOLERANCES: AISC STANDARDS.

1.3 SUBMITTALS:

A. SUBMIT FABRICATION AND ERECTION DRAWINGS SHOWING ALL DETAILS, CONNECTIONS, MATERIAL DESIGNATIONS, AND ALL TOP OF STEEL ELEVATIONS TO ENGINEER FOR APPROVAL:

B. WELDERS SHALL BE QUALIFIED AS PRESCRIBED IN AWS D1.1. PART 2 PRODUCTS

2.1 MATERIALS

A. STRUCTURAL STEEL:

1. STRUCTURAL STEEL SHAPES, PLATES, AND BARS: ASTM A 572, ASTM A-36.

2. COLD-FORMED STEEL TUBING: ASTM A 500, GRADE B.

3. STEEL PIPE: ASTM A 53, TYPE E OR S, GRADE B; OR ASTM A 501.

4. ANCHOR BOLTS: ASTM A 307, NON-HEADED TYPE

5. COMMON (MACHINE) BOLTS SHALL CONFORM TO ASTM A307 GRADE A AND NUTS TO ASTM A563. ONE COMMON BOLT ASSEMBLY SHALL CONSIST OF A BOLT, A HEAVY HEX NUT, AND A HARDENED WASHER. BOLTS AND NUTS TO BE HOT DIPPED GALVANIZED PER ASTM A153 IF EXPOSED.

6. HIGH STRENGTH BOLTS SHALL CONFORM TO ASTM A325 OR A490, AS APPLICABLE. ONE HIGH STRENGTH BOLT ASSEMBLY SHALL CONSIST OF A HEAVY HEX STRUCTURAL BOLT, A HEAVY HEX NUT, AND A HARDENED WASHER CONFORMING TO ASTM F436. THE HARDENED WASHER SHALL BE INSTALLED AGAINST THE ELEMENT TURNED IN TIGHTENING. BOLTS AND NUTS TO BE HOT-DIP GALVANIZED PER ASTM A153 IF EXPOSED.

7. AUXILIARY MATERIALS:

a. DIRECT TENSION INDICATORS: ASTM A 959

b. ELECTRODES FOR WELDING: AWS CODE; E70XX

8. GROUTS:

a. CEMENT GROUT: PORTLAND CEMENT, SAND.

b. METALLIC SHRINKAGE-RESISTANT GROUT: PREMIXED FERROUS AGGREGATE GROUTING COMPOUND ASTM C 1107.

c. NONMETALLIC SHRINKAGE-RESISTANT GROUT: PREMIXED NONMETALLIC GROUTING COMPOUND, ASTM C 1107.

B. SHOP PAINTING

1. GENERAL: ALL STRUCTURAL STEEL MATERIALS EXPOSED TO THE ELEMENTS SHALL BE HOT DIPPED GALVANIZED PER ASTM 123. ALL OTHER STRUCTURAL STEEL SHALL BE SHOP PRIMED.

a. DO NOT PAINT SURFACES TO BE WELDED OR HIGH-STRENGTH BOLTED WITH FRICTION-TYPE CONNECTIONS.

b. DO NOT PAINT SURFACES SCHEDULED TO RECEIVE SPRAYED-ON FIREPROOFING.

2. STRUCTURAL STEEL FACTORY APPLIED PRIMER PAINT: (FOR NON-GALVANIZED MATERIALS). STANDARD RED OXIDE, LEAD AND CHROMATE-FREE, NON-ASHPHALTIC, RUST-INHIBITING PRIMER COMPLYING WITH FS TT-P-664

3. ZINC COATED (HOT DIP GALVANIZED) PER ASTM A123 (AFTER FABRICATION): TOUCH_UP AFTER ERECTION: CLEAN AND WIRE BRUSH ANY ABRADED AND OTHER SPOTS WORN THROUGH ZINC COATING, INCLUDING THREADED PORTIONS OF BOLTS AND WELDS AND TOUCH_UP WITH GALVANIZING REPAIR PAINT.

C. FIELD PAINTING: REPAIR / TOUCH UP OF DAMAGED GALVANIZED OR PRIMED SURFACES:

a. FOR GALVANIZED SURFACES, USE ORGANIC ZINC-RICH COATING MATCHING THE APPEARANCE OF HOT-DIP GALVANIZING CONTAINING AT LEAST 65% - 69% OR ABOVE 92% METALLIC ZINC. BY WEIGHT IN THE DRY FILM, MEETING THE PERFORMANCE REQUIREMENTS OF THE FOLLOWING: ASTM A 780-01, DOD-P-21035B, MIL-P-46105, AND SSPC PS-12, PS-12.01, PS-20, PS-22, PS-29 AND PS-30

b. FOR PRIMED SURFACES, CLEAN ALL SURFACES AND RE-PRIME PER RECOMMENDATIONS OF ORIGINAL PRIME MATERIALS.

PART 3 EXECUTION

3.1 FABRICATION

A. SHOP FABRICATE AND ASSEMBLE MATERIALS AS SPECIFIED HEREIN:

1. FABRICATE ITEMS IN ACCORDANCE WITH THE AISC-ASD SPECIFICATIONS

2. ALL EXPOSED STRUCTURAL STEEL SHALL BE HOT DIP GALVANIZED PER ASTM A123

3. PROPERLY MARK AND MATCH-MARK MATERIALS FOR FIELD ASSEMBLY AND FOR IDENTIFICATION AS TO LOCATION FOR WHICH INTENDED

4. FABRICATE AND DELIVER IN A SEQUENCE WHICH WILL EXPEDITE ERECTION AND MINIMIZE FIELD HANDLING OF MATERIALS.

5. PROVIDE FINISH SURFACE OF MEMBERS EXPOSED IN THE FINAL STRUCTURE FREE FROM MARKINGS, BURRS, AND OTHER DEFECTS.

B. CONNECTIONS

1. PROVIDE BOLTS AND WASHERS OF TYPES AND SIZE REQUIRED FOR COMPLETION OF FIELD ERECTION. USE ¾ INCH DIAMETER A325 N BOLTS UNLESS NOTED OTHERWISE.

2. INSTALL HIGH STRENGTH THREADED FASTENERS IN ACCORDANCE WITH RCSC "SPECIFICATIONS FOR STRUCTURAL JOINTS" USING ASTM A325 N OR ASTM A490 BOLTS."

3. WELDED CONSTRUCTION SHALL COMPLY WITH AWS D1.1 FOR PROCEDURES, APPEARANCE, QUALITY OF WELDS, AND METHODS USED IN CORRECTING WELDED WORK.

4. THE FABRICATOR SHALL FURNISH AND INSTALL ERECTION CLIPS FOR FIT-UP OF WELDED CONNECTIONS.

5. DOUBLE ANGLE MEMBERS SHALL HAVE WELDED FILLERS SPACED IN ACCORDANCE WITH CHAPTER E4 OF THE AISC-ASD SPECIFICATION.

6. GUSSET AND STIFFENER PLATES SHALL BE 3/8 INCH THICK MINIMUM.

3.2 INSTALLATION

A. INSTALLATION OF STRUCTURAL STEEL SHALL COMPLY WITH AISC "CODE OF STANDARD PRACTICE".

B. STRUCTURAL FIELD WELDING SHALL BE DONE BY THE ELECTRIC SUBMERGED OR SHIELDED METAL ARC PROCESS. WELDED CONSTRUCTION SHALL COMPLY WITH AWS D1.1

C. PROVIDE TEMPORARY SHORING AND BRACING WITH CONNECTIONS OF SUFFICIENT STRENGTH TO BEAR IMPOSED LOADS. REMOVE WHEN FINAL CONNECTIONS HAVE BEEN MADE.

D. ALIGN AND ADJUST MEMBERS AS REQUIRED PRIOR TO FINAL INSPECTION.

E. INSTALL AND FULLY TENSION HIGH STRENGTH THREADED FASTENERS IN ACCORDANCE WITH RCSC, "SPECIFICATIONS FOR STRUCTURAL JOINTS" USING ASTM A 325 N OR ASTM A 490 BOLTS."

3.3 FINAL INSPECTION

A. CLEAN ALL SURFACES UPON COMPLETION OF WORK

B. COMPLY WITH AISC CODES AND SPECIFICATIONS, AND WITH AWS "STRUCTURAL WELDING CODE".

C. TOUCH-UP FIELD WELDS AND ABRADED AREAS AS REQUIRED.

END OF SECTION

RECEIVED
SEP 06 2016

PLANS PREPARED FOR:

verizon

PLANS PREPARED BY:

9900 West 109th Street, Suite 300
Overland Park, Kansas 66210
Phone: 913-438-7700
Fax: 913-438-7777
SSC

ENGINEERING LICENSE:

STATE OF KANSAS
PE CERTIFICATE OF AUTHORIZATION #C-
ENGINEER: PE #

MLO	MICHAEL L. OWENS	STRUCTURAL/CIVIL	SC
KV	KEVIN VANWALE	STRUCTURAL/CIVIL	SC
REJ	ROBERT E.	STRUCTURAL/CIVIL	SC
TMS	TERRA	ELECTRICAL	E
SDK	SLINGI 3654	ELECTRICAL	E

PRELIMINARY ISSUE

DRAWING NOTICE:

THIS DRAWING HAS NOT BEEN PUBLISHED AND IS THE SOLE PROPERTY OF SSC, INC. AND IS LENT TO THE BORROWER FOR THEIR CONFIDENTIAL USE ONLY, AND IN CONSIDERATION OF THE LOAN OF THIS DRAWING, THE BORROWER PROMISES AND AGREES TO RETURN IT UPON REQUEST AND AGREES THAT IT WILL NOT BE REPRODUCED, COPIED, LENT OR OTHERWISE DISPOSED OF DIRECTLY OR INDIRECTLY, NOR USED FOR ANY PURPOSE OTHER THAN FOR WHICH IT IS FURNISHED.

SUBMITTALS:

DESCRIPTION	DATE	BY	REV
ISSUED FOR REVIEW	04/18/16	RKT	A
ISSUED FOR LESSOR REVIEW	06/06/16	RKT	B
PER CLIENT COMMENTS	06/23/16	RKT	C
PER CLIENT COMMENTS	08/08/16	RKT	D
ISSUED FOR REVIEW	09/06/16	GAA	E

SITE NAME:

KCYC
EDWARDSVILLE

SITE NUMBER:

300431

SITE ADDRESS:

NORTH FIFTH STREET
EDWARDSVILLE, KANSAS
66111

SHEET DESCRIPTION:

SPECIFICATIONS
(2 OF 8)

SSC #: -

SHEET NUMBER: SP-2

STRUCTURAL STEEL SECTION 05 12 00

PART 1 GENERAL

1.1 SUMMARY

PROVIDE STRUCTURAL STEEL ASSEMBLIES, FABRICATIONS, AND ERECTION OF STEEL AND OTHER ITEMS AS SHOWN ON THE DRAWINGS OR REQUIRED FOR A COMPLETE INSTALLATION.

1.2 QUALITY ASSURANCE

A. COMPLY WITH ALL APPLICABLE GOVERNING CODES AND REGULATIONS. PROVIDE PRODUCTS OF ACCEPTABLE MANUFACTURERS, WHICH HAVE BEEN IN SATISFACTORY USE IN SIMILAR SERVICE FOR THREE YEARS. USE EXPERIENCED INSTALLERS. DELIVER, HANDLE, AND STORE MATERIALS IN ACCORDANCE WITH MANUFACTURER'S INSTRUCTIONS.

B. STANDARDS: AISC, CODE OF STANDARD PRACTICE FOR STEEL BUILDINGS AND BRIDGES, AND APPLICABLE REGULATIONS.

C. ARCHITECTURALLY EXPOSED STRUCTURAL STEEL: COMPLY WITH FABRICATION REQUIREMENTS, INCLUDING TOLERANCE LIMITS, AND INSTALLATION TOLERANCES OF AISC'S "CODE OF STANDARD PRACTICE FOR STEEL BUILDINGS AND BRIDGES" FOR STRUCTURAL STEEL.

D. ERECTION TOLERANCES: AISC STANDARDS.

1.3 SUBMITTALS:

A. SUBMIT FABRICATION AND ERECTION DRAWINGS SHOWING ALL DETAILS, CONNECTIONS, MATERIAL DESIGNATIONS, AND ALL TOP OF STEEL ELEVATIONS TO ENGINEER FOR APPROVAL:

B. WELDERS SHALL BE QUALIFIED AS PRESCRIBED IN AWS D1.1.

PART 2 PRODUCTS

2.1 MATERIALS

A. STRUCTURAL STEEL:

1. STRUCTURAL STEEL SHAPES, PLATES, AND BARS: ASTM A-36.

2. COLD-FORMED STEEL TUBING: ASTM A 500, GRADE B.

3. "W" SHAPES: ASTM A 992.

4. STEEL PIPE: ASTM A 53, TYPE E OR S, GRADE B; OR ASTM A 501.

5. ANCHOR BOLTS: ASTM A 307, NON-HEADED TYPE

6. COMMON (MACHINE) BOLTS SHALL CONFORM TO ASTM A307 GRADE A AND NUTS TO ASTM A563. ONE COMMON BOLT ASSEMBLY SHALL CONSIST OF A BOLT, A HEAVY HEX NUT, AND A HARDENED WASHER. BOLTS AND NUTS TO BE HOT DIPPED GALVANIZED PER ASTM A153 IF EXPOSED.

7. HIGH STRENGTH BOLTS SHALL CONFORM TO ASTM A325 OR A490, AS APPLICABLE. ONE HIGH STRENGTH BOLT ASSEMBLY SHALL CONSIST OF A HEAVY HEX STRUCTURAL BOLT, A HEAVY HEX NUT, AND A HARDENED WASHER CONFORMING TO ASTM F436. THE HARDENED WASHER SHALL BE INSTALLED AGAINST THE ELEMENT TURNED IN TIGHTENING. BOLTS AND NUTS TO BE HOT-DIP GALVANIZED PER ASTM A153 IF EXPOSED.

8. AUXILIARY MATERIALS:

a. DIRECT TENSION INDICATORS: ASTM A 959

b. ELECTRODES FOR WELDING: AWS CODE; E70XX

B. GROUTS:

c. CEMENT GROUT: PORTLAND CEMENT, SAND.

d. METALLIC SHRINKAGE-RESISTANT GROUT: PREMIXED FERROUS AGGREGATE GROUTING COMPOUND ASTM C 1107.

e. NONMETALLIC SHRINKAGE-RESISTANT GROUT: PREMIXED NONMETALLIC GROUTING COMPOUND, ASTM C 1107.

B. SHOP PAINTING

1. GENERAL: ALL STRUCTURAL STEEL MATERIALS EXPOSED TO THE ELEMENTS SHALL BE HOT DIPPED GALVANIZED PER ASTM 123. ALL OTHER STRUCTURAL STEEL SHALL BE SHOP PRIMED.

a. DO NOT PAINT SURFACES TO BE WELDED OR HIGH-STRENGTH BOLTED WITH FRICTION-TYPE CONNECTIONS.

b. DO NOT PAINT SURFACES SCHEDULED TO RECEIVE SPRAYED-ON FIREPROOFING.

2. STRUCTURAL STEEL FACTORY APPLIED PRIMER PAINT: (FOR NON-GALVANIZED MATERIALS). STANDARD RED OXIDE, LEAD AND CHROMATE-FREE, NON-ASHPHALTIC, RUST-INHIBITING PRIMER COMPLYING WITH FS TT-P-664

3. ZINC COATED (HOT DIP GALVANIZED) PER ASTM A123 (AFTER FABRICATION): TOUCH_UP AFTER ERECTION: CLEAN AND WIRE BRUSH ANY ABRADED AND OTHER SPOTS WORN THROUGH ZINC COATING, INCLUDING THREADED PORTIONS OF BOLTS AND WELDS AND TOUCH_UP WITH GALVANIZING REPAIR PAINT.

C. FIELD PAINTING: REPAIR/TOUCH UP OF DAMAGED GALVANIZED OR PRIMED SURFACES:

a. FOR GALVANIZED SURFACES, USE ORGANIC ZINC-RICH COATING MATCHING THE APPEARANCE OF HOT-DIP GALVANIZING CONTAINING AT LEAST 65% - 69% OR ABOVE 92% METALLIC ZINC. BY WEIGHT IN THE DRY FILM, MEETING THE PERFORMANCE REQUIREMENTS OF THE FOLLOWING: ASTM A 780-01, DOD-P-21035B, MIL-P-46105, AND SSPC PS-12, PS-12.01, PS-20, PS-22, PS-29 AND PS-30

b. FOR PRIMED SURFACES, CLEAN ALL SURFACES AND RE-PRIME PER RECOMMENDATIONS OF ORIGINAL PRIME MATERIALS.

PART 3 EXECUTION

3.1 FABRICATION

A. SHOP FABRICATE AND ASSEMBLE MATERIALS AS SPECIFIED HEREIN:

1. FABRICATE ITEMS IN ACCORDANCE WITH THE AISC-ASD SPECIFICATIONS

2. ALL EXPOSED STRUCTURAL STEEL SHALL BE HOT DIP GALVANIZED PER ASTM A123

3. PROPERLY MARK AND MATCH-MARK MATERIALS FOR FIELD ASSEMBLY AND FOR IDENTIFICATION AS TO LOCATION FOR WHICH INTENDED

4. FABRICATE AND DELIVER IN A SEQUENCE WHICH WILL EXPEDITE ERECTION AND MINIMIZE FIELD HANDLING OF MATERIALS.

5. PROVIDE FINISH SURFACE OF MEMBERS EXPOSED IN THE FINAL STRUCTURE FREE FROM MARKINGS, BURRS, AND OTHER DEFECTS.

B. CONNECTIONS

1. PROVIDE BOLTS AND WASHERS OF TYPES AND SIZE REQUIRED FOR COMPLETION OF FIELD ERECTION. USE ¾ INCH DIAMETER A325 N BOLTS UNLESS NOTED OTHERWISE.

2. INSTALL HIGH STRENGTH THREADED FASTENERS IN ACCORDANCE WITH RCSC 'SPECIFICATIONS FOR STRUCTURAL JOINTS' USING ASTM A325 N OR ASTM A490 BOLTS.'

3. WELDED CONSTRUCTION SHALL COMPLY WITH AWS D1.1 FOR PROCEDURES, APPEARANCE, QUALITY OF WELDS, AND METHODS USED IN CORRECTING WELDED WORK.

4. THE FABRICATOR SHALL FURNISH AND INSTALL ERECTION CLIPS FOR FIT-UP OF WELDED CONNECTIONS.

5. DOUBLE ANGLE MEMBERS SHALL HAVE WELDED FILLERS SPACED IN ACCORDANCE WITH CHAPTER E4 OF THE AISC-ASD SPECIFICATION.

6. GUSSET AND STIFFENER PLATES SHALL BE 3/8 INCH THICK MINIMUM.

3.2 INSTALLATION:

A. INSTALLATION OF STRUCTURAL STEEL SHALL COMPLY WITH AISC 'CODE OF STANDARD PRACTICE'.

B. STRUCTURAL FIELD WELDING SHALL BE DONE BY THE ELECTRIC SUBMERGED OR SHIELDED METAL ARC PROCESS. WELDED CONSTRUCTION SHALL COMPLY WITH AWS D1.1

C. PROVIDE TEMPORARY SHORING AND BRACING WITH CONNECTIONS OF SUFFICIENT STRENGTH TO BEAR IMPOSED LOADS. REMOVE WHEN FINAL CONNECTIONS HAVE BEEN MADE.

D. ALIGN AND ADJUST MEMBERS AS REQUIRED PRIOR TO FINAL INSPECTION.

E. INSTALL AND FULLY TENSION HIGH STRENGTH THREADED FASTENERS IN ACCORDANCE WITH RCSC, 'SPECIFICATIONS FOR STRUCTURAL JOINTS' USING ASTM A 325 N OR ASTM A 490 BOLTS.'

3.3 FINAL INSPECTION

A. CLEAN ALL SURFACES UPON COMPLETION OF WORK

B. COMPLY WITH AISC CODES AND SPECIFICATIONS, AND WITH AWS "STRUCTURAL WELDING CODE".

C. TOUCH-UP FIELD WELDS AND ABRADED AREAS AS REQUIRED.

END OF SECTION

RECEIVED
SEP 06 2016

PLANS PREPARED FOR:

verizon ✓

PLANS PREPARED BY:

9900 West 109th Street, Suite 300
Overland Park, Kansas 66210
Phone: 913-438-7700
Fax: 913-438-7777
SSC

ENGINEERING LICENSE:

STATE OF KANSAS
PE CERTIFICATE OF AUTHORIZATION #E-
ENGINEER: PE #

MLO	MICHAEL L. OWENS	STRUCTURAL/CIVIL	SC
KV	KEVIN VANMAELE	STRUCTURAL/CIVIL	SC
REJ	ROBERT E.	STRUCTURAL/CIVIL	SC
TMS	TERRA	ELECTRICAL	E
SOK	SU	ELECTRICAL	E

PRELIMINARY ISSUE

DRAWING NOTICE:

THIS DRAWING HAS NOT BEEN PUBLISHED AND IS THE SOLE PROPERTY OF SSC, INC. AND IS LENT TO THE BORROWER FOR THEIR CONFIDENTIAL USE ONLY. AND IN CONSIDERATION OF THE LOAN OF THIS DRAWING, THE BORROWER PROMISES AND AGREES TO RETURN IT UPON REQUEST AND AGREES THAT IT WILL NOT BE REPRODUCED, COPIED, LENT OR OTHERWISE DISPOSED OF DIRECTLY OR INDIRECTLY, NOR USED FOR ANY PURPOSE OTHER THAN FOR WHICH IT IS FURNISHED.

SUBMITTALS

DESCRIPTION	DATE	BY	REV
ISSUED FOR REVIEW	04/18/16	RKT	A
ISSUED FOR LESSOR REVIEW	06/06/16	RKT	B
PER CLIENT COMMENTS	06/23/16	RKT	C
PER CLIENT COMMENTS	08/06/16	RKT	D
ISSUED FOR REVIEW	09/06/16	GAA	E

SITE NAME:

KCYC
EDWARDSVILLE

SITE NUMBER:

300431

SITE ADDRESS:

NORTH FIFTH STREET
EDWARDSVILLE, KANSAS
66111

SHEET DESCRIPTION:

SPECIFICATIONS
(3 OF 8)

SSC #: -

SHEET NUMBER: SP-3

COMMUNICATIONS/ANTENNA'S SECTION 27 00 00

GENERAL:

1.1 WORK INCLUDED

A. ANTENNA AND COAXIAL CABLES ARE FURNISHED BY OWNER UNDER SEPARATE CONTRACT. THE CONTRACTOR SHALL ASSIST ANTENNA INSTALLATION CONTRACTOR IN TERMS OF COORDINATION AND SITE ACCESS. ERECTION SUBCONTRACTOR SHALL BE RESPONSIBLE FOR THE PROTECTION OF PERSONNEL AND PROPERTY FROM HAZARDOUS EXPOSURE TO OVERHEAD DANGER.

B. INSTALL ANTENNAS AS INDICATED ON DRAWINGS AND OWNER SPECIFICATIONS.

C. INSTALL GALVANIZED STEEL ANTENNA MOUNTS AS INDICATED ON DRAWINGS.

D. INSTALL FURNISHED GALVANIZED STEEL WAVEGUIDE LADDER AS INDICATED ON DRAWINGS.

E. THE CONTRACTOR SHALL PROVIDE FREQUENCY DOMAIN REFLECTOMETER (FDR) TEST RESULTS TO THE CONSTRUCTION MANAGER AND OWNER WITHIN ONE WEEK OF COMPLETION.

F. INSTALL COAXIAL CABLES AND TERMINATORS BETWEEN ANTENNAS AND EQUIPMENT PER MANUFACTURER'S RECOMMENDATIONS. WEATHERPROOF ALL CONNECTORS BETWEEN THE ANTENNA AND EQUIPMENT PER MANUFACTURER'S REQUIREMENTS. TERMINATE ALL COAXIAL CABLE THREE (3) FEET IN EXCESS OF ENTRY PORT LOCATION UNLESS OTHERWISE STATED.

G. ANTENNA AND COAXIAL CABLE GROUNDING:

1. ALL COAXIAL CABLE GROUNDING CONNECTIONS ARE TO BE WEATHER SEALED WITH ANDREW CONNECTOR/SPLICE WEATHERPROOFING KITS OR EQUIVALENT.

2. ALL COAXIAL CABLE GROUNDING KITS ARE TO BE INSTALLED ON STRAIGHT RUNS OF COAXIAL CABLE (NOT WITHIN BENDS)

1.2 RELATED WORK

A. FURNISH THE FOLLOWING WORK AS SPECIFIED UNDER CONSTRUCTION DOCUMENTS, BUT COORDINATE WITH OTHER TRADES PRIOR TO BID:

1. FLASHING OF OPENING INTO OUTSIDE WALLS.

2. SEAL AND CAULK ALL OPENINGS.

3. PAINTING.

4. CUTTING AND PATCHING.

1.3 REQUIREMENTS OF REGULATOR AGENCIES

A. FURNISH UL LISTED EQUIPMENT WHERE SUCH LABEL IS AVAILABLE, INSTALL IN CONFORMANCE WITH UL STANDARDS WHERE APPLICABLE.

B. INSTALL ANTENNA, ANTENNA CABLES, AND GROUNDING SYSTEM IN ACCORDANCE WITH DRAWINGS AND SPECIFICATIONS IN EFFECT AT PROJECT LOCATION AND RECOMMENDATIONS OF STATE AND LOCAL BUILDING CODES, AND ANY SPECIAL CODES HAVING JURISDICTION OVER SPECIFIC PORTIONS OF WORK. THIS INCLUDES BUT IS NOT LIMITED TO THE FOLLOWING:

1. TIA – TELECOMMUNICATIONS INDUSTRY ASSOCIATION –222; STRUCTURAL STANDARDS FOR STEEL ANTENNA TOWERS AND ANTENNA SUPPORTING STRUCTURES.

2. FAA – FEDERAL AVIATION ADMINISTRATION ADVISORY CIRCULAR AC 70/7460–1K, OBSTRUCTION MARKING AND LIGHTING.

3. FCC – FEDERAL COMMUNICATIONS COMMISSION RULES AND REGULATIONS OBSTRUCTION MARKING AND LIGHTING SPECIFICATIONS FOR ANTENNA STRUCTURES AND HIGH INTENSITY OBSTRUCTION LIGHTING SPECIFICATIONS FOR ANTENNA STRUCTURES.

4. AISC – AMERICAN INSTITUTE OF STEEL CONSTRUCTION SPECIFICATION FOR STRUCTURAL JOINTS USING ASTM A325 OR A490 BOLTS.

5. NEC – NATIONAL ELECTRICAL CODE FOR TOWER LIGHTING KITS.

6. UL – UNDERWRITERS LABORATORIES APPROVED ELECTRICAL PRODUCTS.

7. IN ALL CASES, THE FAA RULES AND THE FCC RULES ARE APPLICABLE AND IN THE EVENT OF CONFLICT, SUPERSEDE ANY OTHER STANDARDS OR SPECIFICATIONS.

8. LIFE SAFETY CODE NFPA, LATEST EDITION.

SITE CLEARING / EROSION CONTROL SECTION 31 00 00

PART 1 GENERAL

1.1 SUMMARY

A. PROVIDE SITE–CLEARING AS REQUIRED TO COMPLETE WORK AS SHOWN ON CONTRACT DOCUMENTS INCLUDING CLEARING, GRUBBING, STRIPPING, EROSION AND SILTATION CONTROL, AND PROTECTION OF LANDSCAPE MATERIALS DESIGNATED TO BE PROTECTED DURING CONSTRUCTION.

1.2 QUALITY ASSURANCE

A. COMPLY WITH GOVERNING CODES AND REGULATIONS.

B. SITE PROTECTION: PROVIDE ALL NECESSARY JOB SITE MAINTENANCE FROM COMMENCEMENT OF WORK UNTIL COMPLETION OF THE SUBCONTRACT

C. AVOID DAMAGE TO THE SITE AND TO EXISTING FACILITIES, STRUCTURES, TREES, AND SHRUBS DESIGNATED TO REMAIN. TAKE PROTECTIVE MEASURES TO PREVENT EXISTING FACILITIES THAT ARE NOT DESIGNATED FOR REMOVAL FROM BEING DAMAGED BY THE WORK.

PART 2 PRODUCTS

2.1 MATERIALS

A. TREE PROTECTION, EROSION CONTROL, SILTATION CONTROL, AND DUST CONTROL MATERIALS SUITABLE FOR SITE CONDITIONS.

PART 3 EXECUTION

3.1 SITE CLEARING OPERATIONS

A. PROTECTION OF EXISTING TREES, VEGETATION, LANDSCAPING, AND SITE IMPROVEMENTS NOT SCHEDULED FOR CLEARING WHICH MIGHT BE DAMAGED BY CONSTRUCTION ACTIVITIES.

B. TRIMMING OF EXISTING TREES AND VEGETATION AS RECOMMENDED BY ARBORIST FOR PROTECTION DURING CONSTRUCTION ACTIVITIES.

C. CLEARING AND GRUBBING OF STUMPS AND VEGETATION, AND REMOVAL AND DISPOSAL OF DEBRIS, RUBBISH, DESIGNATED TREES, AND SITE IMPROVEMENTS.

D. TOPSOIL STRIPPING AND STOCKPILING.

E. TEMPORARY EROSION CONTROL, SILTATION CONTROL, AND DUST CONTROL.

F. TEMPORARY PROTECTION OF ADJACENT PROPERTY, STRUCTURES, BENCHMARKS, AND MONUMENTS.

G. WATERING OF TREES AND VEGETATION DURING CONSTRUCTION ACTIVITIES.

H. REMOVAL AND LEGAL DISPOSAL OF CLEARED MATERIALS.

I. MAINTAIN ALL EXISTING FENCING AND GATES TO MAINTAIN A SECURE SITE AT ALL TIMES.

J. PROVIDE AND MAINTAIN ALL TEMPORARY FENCING, BARRICADES, WARNING SIGNALS AND SIMILAR DEVICES NECESSARY TO PROTECT LIFE AND PROPERTY DURING THE ENTIRE PERIOD OF CONSTRUCTION. REMOVE ALL SUCH DEVICES UPON COMPLETION OF THE WORK.

3.2 CLEARING

A. PREVENT DAMAGE TO EXISTING IMPROVEMENTS INDICATED TO REMAIN, INCLUDING ON AND OFF SITE. PROTECT EXISTING TREES AND VEGETATION INDICATED TO REMAIN. DO NOT STOCKPILE MATERIALS AND RESTRICT TRAFFIC WITHIN DRIP LINE OF EXISTING TREES TO REMAIN OR THAT INTERFERE WITH ACCESS TO SITE. PROVIDE AND MAINTAIN TEMPORARY GUARDS TO ENCIRCLE TREES OR GROUPS OF TREES TO REMAIN; OBTAIN APPROVAL BEFORE BEGINNING WORK.

B. WATER VEGETATION AS REQUIRED TO MAINTAIN HEALTH. COVER TEMPORARILY EXPOSED ROOTS WITH WET BURLAP AND BACKFILL AS SOON AS POSSIBLE. COAT CUT PLANT SURFACES WITH APPROVED EMULSIFIED ASPHALT PLANT COATING.

C. REPAIR OR REPLACE VEGETATION DESIGNATED FOR REUSE, WHICH HAS BEEN DAMAGED. REMOVE HEAVY GROWTHS OF GRASS BEFORE STRIPPING. STOCKPILE SATISFACTORY TOPSOIL CONTAINING NO LARGE STONES, FOREIGN MATTER AND WEEDS ON SITE FOR REUSE.

D. COMPLETELY REMOVE ALL IMPROVEMENTS, STUMPS AND DEBRIS EXCEPT FOR THOSE INDICATED TO REMAIN. REMOVE BELOW GRADE IMPROVEMENTS AT LEAST 12" BELOW FINISH GRADE SO AS NOT TO INTERFERE WITH NEW CONSTRUCTION. REMOVE ABANDONED MECHANICAL AND ELECTRICAL WORK AS REQUIRED.

E. PREVENT EROSION AND SILTATION OF STREETS, CATCH BASINS AND PIPING. CONTROL WINDBLOWN DUST. REMOVE WASTE MATERIALS AND UNSUITABLE SOIL FROM SITE AND DISPOSE OF IN A LEGAL MANNER.

F. EXCEPT WHERE EXCAVATION TO GREATER DEPTH IS INDICATED, FILL DEPRESSIONS RESULTING FROM CLEARING, GRUBBING AND DEMOLITION WORK COMPLETELY WITH SUITABLE FILL AND COMPACT AS REQUIRED.

3.3 EROSION CONTROL

A. PROVIDE EROSION AND SILTATION CONTROL AS REQUIRED TO MEET ALL LOCAL AND STATE REQUIREMENTS. END OF SECTION

RECEIVED
SEP 06 2016

PLANS PREPARED FOR:

verizon ✓

PLANS PREPARED BY:

9900 West 109th Street, Suite 300
Overland Park, Kansas 66210
Phone: 913-438-7700
Fax: 913-438-7777
SSC

ENGINEERING LICENSE:

STATE OF KANSAS
PE CERTIFICATE OF AUTHORIZATION #E-
ENGINEER: PE #

MLO	MICHAEL L. OWENS	STRUCTURAL/CIVIL	SC
KV	KEVIN VANMAELE	STRUCTURAL/CIVIL	SC
REJ	ROBERT E.	STRUCTURAL/CIVIL	SC
TMS	TERRA #8250	ELECTRICAL	E
SDK	SUSLING 3654	ELECTRICAL	E

PRELIMINARY ISSUE

DRAWING NOTICE:

THIS DRAWING HAS NOT BEEN PUBLISHED AND IS THE SOLE PROPERTY OF SSC, INC. AND IS LENT TO THE BORROWER FOR THEIR CONFIDENTIAL USE ONLY, AND IN CONSIDERATION OF THE LOAN OF THIS DRAWING, THE BORROWER PROMISES AND AGREES TO RETURN IT UPON REQUEST AND AGREES THAT IT WILL NOT BE REPRODUCED, COPIED, LENT OR OTHERWISE DISPOSED OF DIRECTLY OR INDIRECTLY, NOR USED FOR ANY PURPOSE OTHER THAN FOR WHICH IT IS FURNISHED.

SUBMITTALS

DESCRIPTION	DATE	BY	REV
ISSUED FOR REVIEW	04/18/16	RKT	A
ISSUED FOR LESSOR REVIEW	06/08/16	RKT	B
PER CLIENT COMMENTS	06/23/16	RKT	C
PER CLIENT COMMENTS	08/08/16	RKT	D
ISSUED FOR REVIEW	09/06/16	GAA	E

SITE NAME:

KCYC
EDWARDSVILLE

SITE NUMBER:

300431

SITE ADDRESS:

NORTH FIFTH STREET
EDWARDSVILLE, KANSAS
66111

SHEET DESCRIPTION:

SPECIFICATIONS
(4 OF 8)

SSC #: -

SHEET NUMBER: SP-4

EARTH MOVING / EXCAVATION / BACKFILLING SECTION 31 20 00

PART 1 GENERAL

1.1 SUMMARY

PROVIDE EARTHWORK OPERATIONS INCLUDING BUT NOT LIMITED TO EXCAVATION, GRADING, TRENCHING AND COMPACTION.

1.2 QUALITY ASSURANCE COMPACTION:

UNDER STRUCTURES, BUILDING SLABS, STEPS, PAVEMENTS, AND WALKWAYS, 95 PERCENT MAXIMUM DENSITY, ASTM D 1557.

A. GRADING TOLERANCES:

1. LAWNS, UNPAVED AREAS, AND WALKS, PLUS OR MINUS 1 INCH.

2. KEEP SITE FREE FROM ANY PONDING WATER

3. GRADING TOLERANCE FOR FILL UNDER BUILDING OR EQUIPMENT SLABS: PLUS OR MINUS 1/4 INCH MEASURED WITH 10-FOOT STRAIGHTEDGE.

B. TESTING: FIELD TESTING OF EARTHWORK AND COMPACTION SHALL BE PERFORMED BY OWNER'S INDEPENDENT TESTING LAB. THIS WORK IS TO BE COORDINATED BY THE CONTRACTOR.

C. ALL WORK SHALL BE INSPECTED AND RELEASED BY THE OWNER OR HIS AGENT WHO SHALL CARRY OUT THE GENERAL INSPECTION OF THE WORK AS SPECIFIED AND/OR CALLED OUT BY THE CONSTRUCTION DOCUMENTS. PROVIDE A MINIMUM OF 48 HOURS NOTICE PRIOR TO ANY PLACEMENT OF CONCRETE OR BACKFILLING OF TRENCHES. IT IS THE CONTRACTOR'S RESPONSIBILITY TO REQUEST TIMELY INSPECTIONS PRIOR TO PROCEEDING WITH FURTHER WORK THAT WOULD MAKE PARTS OF WORK INACCESSIBLE OR DIFFICULT TO INSPECT.

D. EXISTING UTILITIES: DO NOT INTERRUPT EXISTING UTILITIES SERVING FACILITIES OCCUPIED BY THE OWNER OR OTHERS, EXCEPT WHEN PERMITTED IN WRITING BY OWNER OR HIS AGENT AND THEN ONLY AFTER ACCEPTABLE TEMPORARY UTILITY SERVICES HAVE BEEN PROVIDED.

PART 2 PRODUCTS

2.1 GENERAL

A. UTILITY TRENCH: PROVIDE WELL GRADED SAND (SW-SM) FROM BASE OF TRENCH TO MINIMUM ABOVE THE HIGHEST CONDUIT WITHIN TRENCH. REMAINDER OF TRENCH AREA CAN BE EITHER AB 3 OR CLEAN GRAVEL AS DESCRIBED HEREIN. COMPACT AS REQUIRED TO PREVENT SETTLING.

B. ACCESS ROADS: 6" MINIMUM (UNLESS NOTED OTHERWISE ON DRAWINGS) COMPACTED AB 3 OR APPROVED EQUAL (UNWASHED CRUSHED LIMESTONE GRAVEL CONSISTING OF MULTIPLE AGGREGATE SIZES, ROCK CHIPS, AND ROCK DUST.)

C. COMPOUND (NEW CONSTRUCTION): 2" THICK CLEAN GRAVEL, WITH 100% PASSING THROUGH A 1" SIEVE OVER 4 INCH COMPACTED AB 3.

D. COMPOUND (EXISTING): PROVIDE CLEAN GRAVEL WITH 100% PASSING THROUGH A 1" SIEVE AS REQUIRED TO BRING COMPOUND TO PROPER GRADE OR REPAIR EXISTING DAMAGED AREAS.

E. STRUCTURAL FILL: PROVIDE 4" MINIMUM AB 3 BELOW STRUCTURES OR SLABS

2.2 MATERIALS

A. GEOTEXTILE FABRIC: PROVIDE MIRAFI 500X OR APPROVED EQUAL.

B. PLASTIC MARKING TAPE: SHALL BE ACID AND ALKALI RESISTANT POLYETHYLENE FILM SPECIFICALLY WIDE WITH A MINIMUM THICKNESS OF "MANUFACTURED FOR MARKING AND LOCATING UNDERGROUND UTILITIES,

C. PLASTIC MARKING TAPE: SHALL BE ACID AND ALKALI RESISTANT POLYETHYLENE FILM SPECIFICALLY MANUFACTURED FOR MARKING AND LOCATING UNDERGROUND UTILITIES, 6" WIDE WITH A MINIMUM THICKNESS OF 0.004 INCH. TAPE SHALL HAVE MINIMUM STRENGTH OF 1500 PSI IN BOTH DIRECTIONS AND MANUFACTURED WITH INTEGRAL WIRES OR OTHER MEANS TO ENABLE DETECTION BY A METAL DETECTOR WHEN BURIED UP TO 3 FEET DEEP. THE CORE OF THE TAPE SHALL BE ENCASED IN A PROTECTIVE JACKET OR OTHER MEANS TO PROTECT FROM CORROSION. TAPE COLOR SHALL BE RED FOR ELECTRIC UTILITIES AND ORANGE FOR TELECOMMUNICATION

PART 3 EXECUTION

3.1 INSTALLATION

A. PRIOR TO EXCAVATING, THOROUGHLY EXAMINE AREA TO BE EXCAVATED AND/OR TRENCHED TO VERIFY THE LOCATIONS OF FEATURES ON THE DRAWINGS AND TO ASCERTAIN THE EXISTENCE OF ANY STRUCTURE NOT SHOWN THAT MIGHT INTERFERE WITH NEW CONSTRUCTION. NOTIFY THE OWNER OR HIS AGENT OF ANY OBSTRUCTIONS THAT WILL PREVENT ACCOMPLISHMENT OF THE WORK AS INDICATED ON THE DRAWINGS.

B. EXCAVATION IS UNCLASSIFIED AND INCLUDES EXCAVATION TO SUBGRADE REGARDLESS OF MATERIALS. REPAIR EXCAVATIONS BEYOND ELEVATIONS AND DIMENSIONS INDICATED AS REQUIRED.

C. MAINTAIN STABILITY OF EXCAVATIONS; COORDINATE SHORING AND BRACING AS REQUIRED BY AUTHORITIES HAVING JURISDICTION. PREVENT SURFACE AND SUBSURFACE WATER FROM ACCUMULATING IN EXCAVATIONS. STOCKPILE SATISFACTORY MATERIALS FOR REUSE, ALLOW FOR PROPER DRAINAGE.

D. COMPACT MATERIALS AT THE OPTIMUM MOISTURE CONTENT AS DETERMINED BY ASTM D 1557 BY AERATION OR WETTING TO 95%XX OF MAXIMUM DRY DENSITY TO SUITABLE DEPTH.

E. PLACE ACCEPTABLE MATERIALS IN LAYERS NOT MORE THAN 8" LOOSE DEPTH FOR MATERIALS COMPACTED BY HEAVY EQUIPMENT AND NOT MORE THAN 4" LOOSE DEPTH FOR MATERIALS COMPACTED BY HAND EQUIPMENT TO SUBGRADES INDICATED AS FOLLOWS:

1. STRUCTURAL FILL: USE UNDER FOUNDATIONS, SLABS ON GRADE IN LAYERS AS INDICATED.

2. DRAINAGE FILL: USE UNDER DESIGNATED BUILDING SLABS, AT FOUNDATION DRAINAGE AND ELSEWHERE AS INDICATED.

3. COMMON FILL: USE UNDER UNPAVED AREAS.

4. SUBBASE MATERIAL: USE UNDER GENERAL COMPOUND AREA. IF THICKNESS OF LIFT IS GREATER THAN 6 SPREAD AND COMPACT THE CRUSHED STONE IN MULTIPLE LIFTS OF EQUAL THICKNESS WITH A MAXIMUM LIFT OF "6

F. GRADE TO 1/2" ABOVE OR BELOW REQUIRED SUBGRADE AND TO A TOLERANCE OF 1/4" IN 10'.

G. PROTECT NEWLY GRADED AREAS FROM TRAFFIC AND EROSION. RE-COMPACT AND RE-GRADE SETTLED, DISTURBED AND DAMAGED AREAS TO RESTORE QUALITY, APPEARANCE, AND CONDITION.

H. CONTROL EROSION TO PREVENT RUNOFF INTO SEWERS OR DAMAGE TO AREAS.

I. CONTROL DUST TO PREVENT HAZARDS TO ADJACENT PROPERTIES AND VEHICLES. IMMEDIATELY REPAIR OR REMEDY DAMAGE CAUSED BY DUST INCLUDING AIR FILTERS IN EQUIPMENT AND VEHICLES. CLEAN SOILED SURFACES.

J. DISPOSE OF WASTE AND UNSUITABLE MATERIALS OFF-SITE IN A LEGAL MANNER.

3.2 BACKFILL

A. AS SOON AS PRACTICAL AFTER COMPLETING CONSTRUCTION OF THE RELATED STRUCTURE, INCLUDING THE SPECIFIED MINIMUM CURING PERIOD FOR CAST-IN-PLACE CONCRETE, BACKFILL THE EXCAVATION WITH APPROVED MATERIAL TO RESTORE THE REQUIRED FINISHED GRADE.

1. PRIOR TO PLACING BACKFILL AROUND STRUCTURES, ALL FORMS SHALL HAVE BEEN REMOVED AND THE EXCAVATION CLEANED OF ALL TRASH, DEBRIS, AND UNSUITABLE MATERIALS.

2. BACKFILL BY PLACING AND COMPACTING SUITABLE BACKFILL MATERIAL OR SELECT GRANULAR BACKFILL MATERIAL, WHEN REQUIRED IN UNIFORM HORIZONTAL LAYERS OF NO GREATER THAN 8 INCHES LOOSE THICKNESS. WHERE HAND OPERATED COMPACTORS ARE USED, THE FILL MATERIAL SHALL BE PLACED IN LIFTS NOT TO EXCEED 4 INCHES IN LOOSE DEPTH.

3. IF THE DENSITY TESTING INDICATES THAT THE SPECIFIED DENSITY, THE SUCCEEDING LAYER SHALL NOT BE PLACED UNTIL THE SPECIFICATION REQUIREMENTS ARE MET UNLESS AUTHORIZED BY THE GEO-TECHNICAL ENGINEER. THE CONTRACTOR SHALL TAKE WHATEVER APPROPRIATE ACTION IS NECESSARY TO OBTAIN PROPER COMPACTION.

B. COMPACT EACH LAYER OF BACKFILL TO A MINIMUM OF 95% OF THE MAXIMUM DRY DENSITY AS PROVIDED BY THE STANDARD PROCTOR TEST, ASTM D 698.

3.3 TRENCH EXCAVATION:

A. UTILITY TRENCHES SHALL BE EXCAVATED TO THE LINES AND GRADES SHOWN ON THE DRAWINGS OR AS DIRECTED BY THE OWNER OR HIS AGENT. PROVIDE SHORING, SHEETING AND BRACING AS REQUIRED TO PREVENT CAVING OR SLOUGHING OF THE TRENCH WALLS.

B. EXTEND THE TRENCH WIDTH A MINIMUM OF 6 INCHES BEYOND THE OUTSIDE EDGE OF THE OUTER- MOST CONDUIT.

C. WHEN SOFT, YIELDING, OR OTHERWISE UNSTABLE SOIL CONDITIONS ARE ENCOUNTERED, BACKFILL AT THE REQUIRED TRENCH TO A DEPTH OF NO LESS THAN 12 INCHES BELOW THE REQUIRED ELEVATION AND BACKFILL WITH GRANULAR BEDDING MATERIAL.

3.4 TRENCH BACKFILL

A. PROVIDE GRANULAR BEDDING MATERIAL (WELL GRADED SAND) IN ACCORDANCE WITH THE DRAWINGS AND THE UTILITY REQUIREMENTS.

B. NOTIFY THE OWNER OR HIS AGENT 24 HOURS IN ADVANCE OF BACKFILLING.

C. CONDUCT UTILITY CHECK TESTS BEFORE BACKFILLING. BACKFILL AND COMPACT TRENCH BEFORE ACCEPTANCE TESTING.

D. PLACE GRANULAR TRENCH BACKFILL UNIFORMLY ON BOTH SIDES OF THE CONDUITS IN 6-INCH UNCOMPACTED LIFTS UNTIL 6 INCHES OVER THE CONDUITS. SOLIDLY RAM AND TAMP BACKFILL INTO SPACES AROUND CONDUITS.

E. PROTECT CONDUIT FROM LATERAL MOVEMENT, IMPACT DAMAGE, OR UNBALANCED LOADING.

F. ABOVE THE CONDUIT EMBEDMENT ZONE, PLACE AND COMPACT BACKFILL MATERIAL IN 8 INCH MAXIMUM LOOSE THICKNESS LIFTS TO RESTORE THE REQUIRED FINISHED SURFACE GRADE.

G. COMPACT FINAL TRENCH BACKFILL TO A DENSITY EQUAL TO OR GREATER THAN EXISTING UNDISTURBED MATERIAL ADJACENT TO THE TRENCH BUT NO LESS THAN A MINIMUM OF 95% OF THE MAXIMUM DRY DENSITY AS PROVIDED BY THE STANDARD PROCTOR TEST, ASTM D 698.

3.5 AGGREGATE ACCESS ROAD (IF APPLICABLE)

A. CLEAR, GRUB, STRIP AND EXCAVATE FOR ACCESS ROAD TO THE LINES AND GRADES INDICATED ON DRAWINGS. SCARIFY TO A DEPTH OF 6 INCHES AND PROOF-ROLL ALL HOLES, RUTS, SOFT PLACES AND OTHER DEFECTS.

B. THE ENTIRE SUBGRADE SHALL BE COMPACTED TO NOT LESS THAN 95% OF THE MAXIMUM DRY DENSITY AS PROVIDED BY THE STANDARD PROCTOR TEST, ASTM D 1557.

C. AFTER PREPARATION OF THE SUBGRADE IS COMPLETE, THE GEOTEXTILE FABRIC (MIRAFI 500X) SHALL BE INSTALLED TO THE LIMITS INDICATED ON DRAWINGS BY ROLLING THE FABRIC OUT LONGITUDINALLY ALONG ROADWAY. THE FABRIC SHALL NOT BE DRAGGED ACROSS THE SUBGRADE. PLACE THE ENTIRE ROLL IN A SINGLE OPERATION, SMOOTHLY AS POSSIBLE.

1. OVERLAPS PARALLEL TO THE ROADWAY WILL BE PERMITTED AT THE CENTERLINE AND AT LOCATIONS BEYOND THE ROADWAY SURFACE WIDTH. NO LONGITUDINAL OVERLAPS SHALL BE LOCATED BETWEEN THE CENTERLINE AND THE SHOULDER. PARALLEL OVERLAPS SHALL BE A MINIMUM OF 3 FEET WIDE.

2. TRANSVERSE OR PERPENDICULAR OVERLAPS AT THE END OF A ROLL SHALL OVERLAP IN THE DIRECTION OF THE AGGREGATE PLACEMENT (PREVIOUS ROLL ON TOP) AND SHALL HAVE A MINIMUM LENGTH OF 3 FEET.

3. ALL OVERLAPS SHALL BE PINNED WITH STAPLES OR NAILS BETWEEN 10 AND 12 INCHES LONG TO INSURE POSITIONING DURING PLACEMENT OF AGGREGATE. PIN LONGITUDINAL SEAMS AT 25 FOOT O. C. AND TRANSVERSE SEAMS EVERY 5 FEET OC.

D. THE AGGREGATE BASE AND SURFACE COURSES SHALL BE CONSTRUCTED IN LAYERS NOT MORE THAN 6 INCHES (COMPACTED) THICKNESS. AGGREGATE TO BE PLACED ON GEOTEXTILE FABRIC AND SHALL BE END-DUMPED ON THE FABRIC FROM THE FREE END OF THE FABRIC OR OVER PREVIOUSLY PLACED AGGREGATE. AT NO TIME SHALL EQUIPMENT BE PERMITTED ON THE ROADWAY WITH LESS THAN 6 INCHES OF MATERIAL COVERING THE FABRIC.

E. THE AGGREGATE SHALL BE IMMEDIATELY COMPACTED TO NOT LESS THAN 95% OF THE MAXIMUM DRY DENSITY AS PROVIDED BY THE PROCTOR TEST, ASTM D 1557 WITH A TAMPING ROLLER, A PNEUMATIC-TIRED ROLLER, OR WITH A VIBRATORY MACHINE OR ANY COMBINATION OF THE ABOVE. THE TOP LAYER SHALL BE GIVEN A FINAL ROLLING WITH A THREE-WHEEL OR TANDEM ROLLER.

3.6 FINISH GRADING

A. PERFORM ALL GRADING TO PROVIDE SMOOTH, EVEN SURFACE DRAINAGE OF THE ENTIRE AREA WITHIN THE LIMITS OF CONSTRUCTION. GRADING SHALL BE COMPATIBLE WITH ALL SURROUNDING TOPOGRAPHY AND STRUCTURES.

B. UTILIZE SATISFACTORY FILL MATERIALS RESULTING FROM THE EXCAVATION WORK IN THE CONSTRUCTION OF FILLS, EMBANKMENTS AND FOR THE REPLACEMENT OF REMOVED UNSUITABLE MATERIALS.

C. ACHIEVE FINISHED GRADE BY PLACING A MINIMUM OF 6 INCHES OF AB 3 ON TOP OF SOIL STABILIZER FABRIC.

D. REPAIR ALL ACCESS ROADS AND SURROUNDING AREAS USED DURING THE COURSE OF THIS WORK TO THEIR ORIGINAL CONDITION.

END OF SECTION

RECEIVED
SEP 06 2016

PLANS PREPARED FOR:

verizon ✓

PLANS PREPARED BY:

9900 West 109th Street, Suite 300
Overland Park, Kansas 66210
Phone: 913-438-7700
Fax: 913-438-7777
SSC

ENGINEERING LICENSE:

STATE OF KANSAS
PE CERTIFICATE OF AUTHORIZATION #E-
ENGINEER: PE #

MLO	MICHAEL L. OWENS		STRUCTURAL/CIVIL	SC
KV	KEVIN VANMAEL		STRUCTURAL/CIVIL	SC
REJ	ROBERT E.	9096	STRUCTURAL/CIVIL	SC
TMS	TERRANCE	9250	ELECTRICAL	E
SDK	S	SLINGI 3654	ELECTRICAL	E

PRELIMINARY ISSUE

DRAWING NOTICE:

THIS DRAWING HAS NOT BEEN PUBLISHED AND IS THE SOLE PROPERTY OF SSC, INC. AND IS LENT TO THE BORROWER FOR THEIR CONFIDENTIAL USE ONLY, AND IN CONSIDERATION OF THE LOAN OF THIS DRAWING, THE BORROWER PROMISES AND AGREES TO RETURN IT UPON REQUEST AND AGREES THAT IT WILL NOT BE REPRODUCED, COPIED, LENT OR OTHERWISE DISPOSED OF DIRECTLY OR INDIRECTLY, NOR USED FOR ANY PURPOSE OTHER THAN FOR WHICH IT IS FURNISHED.

SUBMITTALS

DESCRIPTION	DATE	BY	REV
ISSUED FOR REVIEW	04/18/16	RKT	A
ISSUED FOR LESSOR REVIEW	06/06/16	RKT	B
PER CLIENT COMMENTS	06/23/16	RKT	C
PER CLIENT COMMENTS	08/08/16	RKT	D
ISSUED FOR REVIEW	09/06/16	GAA	E

SITE NAME:

KCYC
EDWARDSVILLE

SITE NUMBER:

300431

SITE ADDRESS:

NORTH FIFTH STREET
EDWARDSVILLE, KANSAS
66111

SHEET DESCRIPTION:

SPECIFICATIONS
(5 OF 8)

SSC #: -

SHEET NUMBER: SP-5

FENCES AND GATES SECTION 32 31 00

PART 1 GENERAL

1.1 SUMMARY

A. PROVIDE FENCING AND GATES INCLUDING ALL ASSOCIATED POSTS, RAILS, BRACES, TERMINAL POSTS, AND RELATED MATERIALS AS SHOWN ON DRAWINGS.

1. TYPE A: GALVANIZED CHAIN LINK FENCING AND GATES

2. TYPE B: GALVANIZED CHAIN LINK FENCING AND GATES WITH BARBED WIRE

3. TYPE C: TREATED WOOD FENCING AND GATES

4. MATCH EXISTING FENCE

B. TERMINOLOGY:

1. CHAIN LINK CLASSIFICATION: GALVANIZED (ZINC COATED).

2. TREATED LUMBER: TREATED LUMBER SHALL BE "ACQ" OR APPROVED EQUAL. CCA WILL NOT BE ACCEPTED.

3. O.D.: OUTSIDE DIMENSION

1.2 QUALITY ASSURANCE

A. COMPLY WITH GOVERNING CODES AND REGULATIONS.

B. PROVIDE PRODUCTS OF ACCEPTABLE MANUFACTURERS, WHICH HAVE BEEN IN SATISFACTORY USE IN SIMILAR SERVICE FOR THREE YEARS. USE EXPERIENCED INSTALLERS.

1.3 SCHEDULING AND SEQUENCING

A. CERTAIN PORTIONS OF THE WORK MAY BE SPECIFIED TO BE COMPLETED AND OPERATIONAL PRIOR TO COMPLETION OF ALL WORK. SEQUENCE AND PROPERLY PROTECT EQUIPMENT TO PREVENT CONTAMINATION OR DAMAGE TO EQUIPMENT IN ADJACENT WORK AREAS.

B. STORAGE AND PROTECTION: STORE MATERIALS A MINIMUM OF 12 INCHES ABOVE GROUND.

2A PRODUCTS: CHAIN LINK FENCES AND GATES

2A.1 PRODUCTS

A. FENCE FABRIC, POSTS, TENSION WIRE, CORNER POSTS, AND APPURTENANCES SHALL CONFORM TO THE ASTM CODES AND STANDARDS FOR THE APPROPRIATE TYPE OF MATERIALS AS LISTED.

B. MATERIALS SHALL BE UNIFORM, CONSISTENT, AND MEET THE FOLLOWING REQUIREMENTS.

1. FENCE FABRIC: 72 INCHES HIGH (U.N.O.), HEAVY GALV. CHAIN LINK FENCE CONFORMING TO ASTM A392, CLASS 2, OF 2 INCH MESH 9 GAGE WIRE (0.148 INCHES IN DIAMETER), WITH THE TOP SELVAGE BARBED AND THE BOTTOM KNUCKLED.

2. LINE POSTS: FOR FABRIC UP TO AND INCLUDING SIX FEET IN HEIGHT, LINE POSTS SHALL BE GALV. SCHEDULE 40 PIPE WITH 1.90 INCH O.D. FOR FABRIC MORE THAN 8 FEET HIGH (IF REQUIRED TO MATCH EXISTING OR UNUSUAL SITE CONDITIONS), LINE POSTS SHALL BE GALV. SCHEDULE 40 PIPE WITH 2.375 INCH O.D COMPLY WITH ASTM F 1083.3.

3. END, CORNER, AND PULL POSTS: 2.375 INCH O.D.GALV. SCHED. 40 PIPE UP TO 6 FEET AND 2.875 INCH O.D. FOR FENCES OVER 6 FEET. COMPLY WITH ASTM F 1083.

4. GATE POSTS: GALV. SCHED. 40 PIPE WITH 2.875 INCH O.D. COMPLY WITH ASTM F 1083.

5. BRACE RODS (LOCATED ON EACH SIDE OF GATES AND EACH SIDE AT CORNERS): 1.66 INCH O.D. GALV. SCHED. 40.

6. TRUSS RODS / CROSS BRACING: 3/8 INCH DIAMETER DIAGONAL BARS WITH TURNBUCKLE.

7. TENSION WIRE: 7 GA. US STEEL WIRE GALV. PER ASTM A116 COATING CLASS III ATTACHED 1 INCH BELOW TOP SELVAGE AND 2" ABOVE BOTTOM SELVAGE OF FABRIC O.C. "BY MEANS OF HOG RINGS AT 24

8. APPURTENANCES SUCH AS BRACE BANDS, TENSION BANDS AND BARS: FABRICATED OF 1/8 INCH BY 7/8 INCH GALVANIZED STEEL WITH GALV. STEEL CARRIAGE BOLTS AND NUTS PER ASTM A123. TENSION BARS SHALL BE 1/4 BY 3/4 INCH GALV. STEEL BAR PER ASTM A153.

9. FABRIC TIES: CLASS I GALV. STEEL WIRE NO LESS THAN 9 GA.

10. POST TOPS: PROVIDED FOR EACH POST. MATERIALS SHALL BE PRESSED STEEL OR MALLEABLE IRON THAT PROVIDES WATERTIGHT CLOSURE CAP FOR TUBULAR POSTS AND SHALL BE GALV. PER ASTM A153.

11. BARBED WIRE: BARBED WIRE SHALL CONSIST OF DOUBLE STRANDED, 12-1 ½ GAGE O.C. THE TOP 1 FOOT "WIRE ASTM A121, CLASS 3 WITH 4 POINT BARBS SPACED 5 OF THE FENCE SHALL CONSIST OF 3 STRANDS OF BARBED WIRE ATTACHED TO A 45 DEGREE ANGLE WITH HEAVY PRESSED ARMS CAPABLE OF WITHSTANDING, WITHOUT FAILURE 250 POUNDS DOWNWARD PULL AT THE OUTERMOST END OF THE ARM.

12. GATES

a. GATE MATERIALS SUCH AS FABRIC, BOLTS, NUTS, AND TENSION BARS, SHALL BE CONSISTENT WITH FENCE MATERIALS. GATES SHALL CONSIST OF BOTH SINGLE AND DOUBLE SWING GATES AS SHOWN ON THE DRAWINGS.

b. GATES SHALL BE MANUALLY OPERATED.

c. GATE FRAMES SHALL BE 1.90 INCH O.D. PIPE TO BE FURNISHED WITH ALL NECESSARY FITTINGS, INCLUDING HEAVY DUTY COMMERCIAL DOUBLE GATE LATCH SIMILAR OR EQUAL TO DAC INDUSTRIES #4000.

PART 2B PRODUCTS: WOOD FENCES AND GATES

2B.1 PRODUCTS

A. FENCE MATERIALS, INCLUDING POSTS, RAILS, CORNER POSTS, AND PICKETS SHALL BE AS FOLLOWS:

1. END CORNER, GATE, AND PULL POSTS 8 FEET HIGH OR LESS SHALL BE 2 1/2 INCH NPS SCHEDULE 40 GALV. STEEL PIPE PER ASTM A120. (OUTSIDE DIAMETER OF 2.875 INCHES)

2. LINE POSTS UP TO 8 FEET HIGH, SHALL BE 2 INCH NPS GALVANIZED COLD-FORMED AND WELDED STEEL PIPE COMPLYING WITH ASTM F 1043 WITH AN OUTSIDE DIAMETER OF 2.375 INCHES OR PER ASTM A120.

3. TOP, MIDDLE, AND BOTTOM RAILS SHALL BE 2" X 4" TREATED LUMBER

4. PICKETS SHALL BE 1" X 6" TREATED LUMBER

B. TREATED LUMBER

1. ALL ABOVE GROUND MATERIALS SHALL BE TREATED WITH A MINIMUM OF .25 POUNDS OF PRESERVATIVE PER CUBIC FOOT OF MATERIAL.

2. TREATMENT FOR LUMBER SHALL BE APPROVED BY ALL GOVERNING BODIES.

C. GATES:

MANUALLY OPERATED WOOD GATES SHALL BE CONSTRUCTED WITH STEEL FRAME AND WOOD PICKETS. GATES SHALL BE SINGLE OR DOUBLE SWING AS INDICATED ON DRAWINGS.

D. PIPE GRIP TIES: PROVIDE PIPE GRIP TIES OF RECOMMENDED SIZE FOR USE WITH STEEL POSTS SIMPSON PGT'S. INSTALL PER MANUFACTURER'S RECOMMENDATIONS.

PART 3 EXECUTION

3.1 INSTALLATION

A. PHYSICAL LOCATIONS OF FEATURES SUCH AS FENCE LINES, GATES, TERMINAL POSTS SHALL BE PER THE PLANS.

B. INSTALL MATERIALS PER MANUFACTURER'S INSTRUCTIONS. COMPLY WITH ASTM F 567 FOR CHAIN LINK FENCES AND F 537 FOR WOOD FENCES. INSTALL MATERIALS WITH UNIFORM APPEARANCE. COORDINATE WITH OTHER SECTIONS.

C. PROVIDE A REASONABLY SMOOTH PROFILE AT FENCE LINE. BOTTOM OF FENCE SHALL NOT BE MORE THAN 2 INCHES ABOVE FINISHED GRADE. IF FENCE CROSSES EXTREME GRADE DEPRESSION, CONFORM THE FENCE TO THE GROUND CONTOUR, (U.N.O.). CLOSE SPACE BELOW THE BOTTOM OF THE FENCE WITH ADDITIONAL FENCE MATERIALS WHILE MAINTAINING A UNIFORM TOP.

D. POST SPACING AND INSTALLATION

1. INSTALL LINE POSTS AND BRACE AT INTERVALS NOT TO EXCEED 10 FEET AND 8 FEET FOR WOOD FENCES. POSTS SHALL BE EVENLY SPACED. LOCATE CORNER AND TERMINAL POSTS PER DRAWINGS. INSTALL CORNER POSTS WHERE CHANGES IN GRADE EXCEED 30 DEGREES.

2. SET POSTS VERTICALLY IN CYLINDRICAL CONCRETE FOUNDATION IN PER THE SCHEDULE IN TABLE 1 AND IN ACCORDANCE WITH ASTM F567.

TABLE 1 LINE, CORNER, PULL, AND TERMINAL POST INSTALLATION SCHEDULE

	FOUNDATION DIAMETER	FOUNDATION DEPTH	POST EMBEDMENT
LINE POST	0'-10"	3'-6"	3'-0"
TERMINAL POST	1'-0"	3'-6"	3'-0"
GATE POSTS	1'-6"	4'-0"	3'-6"

3. TOP SURFACE OF THE CONCRETE FOUNDATION SHALL BE SMOOTH 1/2 INCH CROWN, SLOPING AWAY FROM THE POST AND BE A MINIMUM OF 4 INCHES BELOW GRADE. THE POST SHALL BE 6 INCHES FROM THE BOTTOM OF THE CONCRETE POUR.

4. HOLES MAY BE HAND AUGURED OR DRILLED. IF ROCK IS ENCOUNTERED, DRILL MIN. 12 INCHES FOR LINE POSTS AND 18 INCHES FOR CORNER, GATE, OR TERMINAL POSTS. DRILL HOLES 1 INCH LARGER THAN SIZES IN TABLE 1. IF SOLID ROCK IS BELOW SOIL OVERBURDEN, DRILL TO FULL DEPTH REQUIRED, EXCEPT PENETRATION INTO ROCK NEED NOT EXCEED MINIMUM DEPTHS SPECIFIED.

E. SETTING POSTS

1. REMOVE ANY LOOSE AND FOREIGN MATERIALS FROM THE SIDES AND BOTTOMS OF THE HOLES; MOISTEN SOIL PRIOR TO PLACING THE CONCRETE. CENTER AND ALIGN POSTS, TAMP TO CONSOLIDATE, AND SECURE UNTIL CONCRETE IS FULLY CURED.

2. KEEP CONCRETE SURFACES MOIST FOR AT LEAST 7 DAYS AFTER PLACEMENT.

3. POSTS SET IN SLEEVED HOLES SHALL BE GROUTED IN PLACE USING A NON-SHRINK PORTLAND CEMENT GROUT APPROVED BY THE ENGINEER.

1. PRIOR TO PLACING COMPONENTS SUCH AS FABRIC, RAILS, TENSION WIRE, AND GATES, VERIFY THAT THE CONCRETE HAS REACHED AT LEAST 75% OF ITS DESIGN STRENGTH AS PRESCRIBED ON THE PLAN DETAILS, OR HAS CURED A MINIMUM OF 7 DAYS AFTER SETTING THE POSTS.

F. BRACING (CHAIN LINK FENCE ONLY)

1. INSTALL TENSION WIRES PARALLEL TO THE LINE OF FABRIC BY WEAVING NO LESS THAN 7 GA. WIRE OF THE APPROPRIATE TYPE THROUGH FABRIC AND TYING TO EACH POST. INSTALL TENSION WIRE BEFORE STRETCHING FABRIC.

2. INSTALL HORIZONTAL PIPE BRACE AT MID-HEIGHT ON EACH SIDE OF TERMINAL POSTS. FIRMLY ATTACH WITH FITTINGS. INSTALL DIAGONAL TRUSS RODS AT THESE POINTS. ADJUST TRUSS ROD, ENSURING POSTS REMAIN PLUMB.

G. INSTALLING FABRIC (CHAIN LINK FENCE ONLY)

1. INSTALL THE CHAIN LINK FENCE FABRIC SO THAT THE POSTS ARE ENCLOSED. STRETCH THE FABRIC TAUT, APPROXIMATELY 2 INCHES ABOVE THE GROUND, AND SECURELY TO THE POSTS.

2. CUT FABRIC AND ATTACH EACH SPAN INDEPENDENTLY AT ALL TERMINAL AND CORNER POSTS. USE STRETCHER BARS WITH FABRIC BANDS SPACED AT MAX. 5 INCH INTERVALS TO FASTEN FABRIC TO TERMINAL POSTS. USE TIE WIRE, METAL BANDS, OR OTHER APPROVED MATERIAL ATTACHED AT MAXIMUM 15 INCH INTERVALS TO FASTEN FABRIC TO LINE POSTS, TOP RAIL OR BOTTOM TENSION WIRE.

H. INSTALLING GATES

1. INSTALL GATES ACCORDING TO THE LOCATIONS, TYPE, AND SIZE INDICATED ON THE PLANS.

2. GATES SHALL BE BRACED AND TRUSSED TO PREVENT SAGGING, BUCKLING, AND WEAVING, AND COVERED WITH SAME FABRIC AS THE FENCE U.N.O. FIXED END RATCHET BANDS SHALL BE FURNISHED FOR FASTENING. FURNISH GATES WITH ALL FITTINGS AND HARDWARE REQUIRED. HEAVY DUTY COMMERCIAL LATCHES PROVIDED FOR USE WITH PADLOCK AND HINGES SHALL ALLOW 180 DEGREE SWING. PROVIDE 3/8 INCH DIAMETER CROSSBRACING.

3. INSTALL GATES PLUMB, LEVEL, AND SECURE FOR THE FULL OPENING WITHOUT INTERFERENCES

4. INSTALL ALL ITEMS PER MANUFACTURER'S RECOMMENDATIONS. INSPECT ALL PARTS AND ATTACHMENTS FOR DEFECTS, AND INSTALL, LUBRICATE, AND ADJUST EQUIPMENT TO ENSURE SMOOTH OPERATION.

5. INSTALL (WELD TO GATE FRAME) TWO 8 INCH SECTIONS (ONE PER GATE) OF ¼ INCH NOMINAL WELDED, GRADE 30 MINIMUM GALVANIZED STEEL CHAIN JUST BELOW LATCH FOR PADLOCKS. VERIFY INSIDE DIMENSIONS OF CHAIN LINK WILL RECEIVE STANDARD PADLOCKS.

I. MISCELLANEOUS INSTALLATION (CHAIN LINK FENCE)

1. USE U-SHAPED TIE WIRES, CONFORMING TO THE DIAMETERS OF PIPE, THAT CLASP THE PIPE AND FABRIC FIRMLY WITH ENDS TWISTED AT LEAST 2 FULL TURNS.

2. INSTALL NUTS FOR FASTENERS ON TENSION BANDS AND HARDWARE BOLTS ON THE SIDE OF THE FENCE OPPOSITE THE FABRIC. THE ENDS OF BOLTS, ONCE SECURE AND CHECKED FOR SMOOTH OPERATION, SHALL BE PEENED TO PREVENT REMOVAL OF NUTS.

3.2 PROTECTION

A. A GUARANTEE SHALL BE FURNISHED FOR ALL MATERIALS, INSTALLATION, AND WORKMANSHIP TO BE FREE OF DEFECTS FOR A PERIOD OF 1 YEAR FROM THE DATE OF ACCEPTANCE UNLESS NOTED OTHERWISE IN THE CONTRACT DOCUMENTS. ANY DEFECT IN INSTALLATION OR WORKMANSHIP SHALL BE REPAIRED, AND/OR REPLACED WITHOUT COST TO THE OWNER.

B. REPAIR COATINGS DAMAGED IN THE FIELD AS RECOMMENDED BY THE MANUFACTURER.

END OF SECTION

RECEIVED
SEP 06 2016

PLANS PREPARED FOR:

verizon ✓

PLANS PREPARED BY:

SSC
9900 West 109th Street, Suite 300
Overland Park, Kansas 66210
Phone: 913-438-7700
Fax: 913-438-7777

ENGINEERING LICENSE:

STATE OF KANSAS
PE CERTIFICATE OF AUTHORIZATION #E-
ENGINEER: PE #

MJO	MICHAEL L. OWENS		STRUCTURAL/CIVIL	SC
KV	KEVIN VANMAEL		STRUCTURAL/CIVIL	SC
REJ	ROBERT E.	9098	STRUCTURAL/CIVIL	SC
TMS	TERRA	9250	ELECTRICAL	E
SDK	SU	3654	ELECTRICAL	E

PRELIMINARY ISSUE

DRAWING NOTICE:

THIS DRAWING HAS NOT BEEN PUBLISHED AND IS THE SOLE PROPERTY OF SSC, INC. AND IS LENT TO THE BORROWER FOR THEIR CONFIDENTIAL USE ONLY, AND IN CONSIDERATION OF THE LOAN OF THIS DRAWING, THE BORROWER PROMISES AND AGREES TO RETURN IT UPON REQUEST AND AGREES THAT IT WILL NOT BE REPRODUCED, COPIED, LENT OR OTHERWISE DISPOSED OF DIRECTLY OR INDIRECTLY, NOR USED FOR ANY PURPOSE OTHER THAN FOR WHICH IT IS FURNISHED.

SUBMITTALS

DESCRIPTION	DATE	BY	REV
ISSUED FOR REVIEW	04/18/16	RKT	A
ISSUED FOR LESSOR REVIEW	06/06/16	RKT	B
PER CLIENT COMMENTS	06/23/16	RKT	C
PER CLIENT COMMENTS	08/08/16	RKT	D
ISSUED FOR REVIEW	09/06/16	GAA	E

SITE NAME:

KCYC
EDWARDSVILLE

SITE NUMBER:

300431

SITE ADDRESS:

NORTH FIFTH STREET
EDWARDSVILLE, KANSAS
66111

SHEET DESCRIPTION:

SPECIFICATIONS
(6 OF 8)

SSC #: -

SHEET NUMBER: SP-6

SECTION 16000 ELECTRICAL

PART 1 GENERAL

1.1 GENERAL CONDITIONS:

A. THE CONTRACTOR SHALL INSPECT THE SITE WHERE THIS WORK IS TO BE PERFORMED AND FULLY FAMILIARIZE HIMSELF WITH ALL CONDITIONS RELATED TO THIS PROJECT.

B. THE CONTRACTOR SHALL OBTAIN AND PAY FOR ALL PERMITS AND LICENSES AND SHALL MAKE ALL DEPOSITS AND PAY ALL FEES REQUIRED FOR THE PERFORMANCE OF WORK UNDER THIS SECTION.

C. DRAWINGS SHOW THE GENERAL ARRANGEMENT OF ALL SYSTEMS AND COMPONENTS COVERED UNDER THIS SECTION. THE CONTRACTOR SHALL VERIFY ALL DIMENSIONS. DRAWINGS SHALL NOT BE SCALED TO DETERMINE DIMENSIONS.

1.2 LAWS, REGULATIONS, ORDINANCES, STATUTES AND CODES.

A. ALL WORK SHALL BE INSTALLED IN ACCORDANCE WITH THE NATIONAL ELECTRICAL CODE, AND ALL APPLICABLE LOCAL LAWS, REGULATIONS, ORDINANCES, STATUTES AND CODES.

1.3 REFERENCES:

A. THE PUBLICATIONS LISTED BELOW FORM PART OF THIS SPECIFICATION. EACH PUBLICATION SHALL BE THE LATEST REVISION AND ADDENDUM IN EFFECT ON THE DATE THIS SPECIFICATION IS ISSUED FOR CONSTRUCTION UNLESS OTHERWISE NOTED. EXCEPT AS MODIFIED BY THE REQUIREMENTS SPECIFIED HEREIN OR THE DETAILS OF THE DRAWINGS, WORK INCLUDED IN THIS SPECIFICATION SHALL CONFORM TO THE APPLICABLE PROVISIONS OF THESE PUBLICATIONS.

1. ANSI/IEEE (AMERICAN NATIONAL STANDARDS INSTITUTE)
2. IEEE (INSTITUTE OF ELECTRICAL AND ELECTRONICS ENGINEERS)
3. ASTM (AMERICAN SOCIETY FOR TESTING AND MATERIALS)
4. ICEA (INSULATED CABLE ENGINEERS ASSOCIATION)
5. NEMA (NATIONAL ELECTRICAL MANUFACTURER'S ASSOCIATION)
6. NFPA (NATIONAL FIRE PROTECTION ASSOCIATION)
7. OSHA (OCCUPATIONAL SAFETY AND HEALTH ADMINISTRATION)
8. UL (UNDERWRITERS LABORATORIES, INC.)

1.4 SCOPE OF WORK:

A. WORK UNDER THIS SECTION SHALL CONSIST OF FURNISHING ALL LABOR, MATERIAL AND ASSOCIATED SERVICES REQUIRED TO COMPLETELY CONSTRUCT AND LEAVE READY FOR OPERATION SYSTEMS AS SHOWN ON THE DRAWINGS AND HEREIN DESCRIBED.

B. ALL ELECTRICAL EQUIPMENT UNDER THIS CONTRACT SHALL BE PROPERLY TESTED, ADJUSTED, AND ALIGNED BY THE CONTRACTOR.

C. THE CONTRACTOR SHALL BE RESPONSIBLE FOR ALL EXCAVATING, DRAINING, TRENCHES, BACKFILLING, AND REMOVAL OF EXCESS DIRT.

D. THE CONTRACTOR SHALL FURNISH TO THE OWNER, CERTIFICATES OF FINAL INSPECTION AND APPROVAL FROM THE INSPECTION AUTHORITIES HAVING JURISDICTION.

PART 2 PRODUCTS

2.1 GENERAL:

A. ALL ITEMS OF MATERIALS AND EQUIPMENT SHALL BE NEW, FREE FROM DEFECTS AND OF THE BEST QUALITY NORMALLY USED FOR THE PURPOSE IN GOOD COMMERCIAL PRACTICE.

B. ALL MATERIALS AND EQUIPMENT SHALL BE ACCEPTABLE TO THE AUTHORITY HAVING JURISDICTION AS SUITABLE FOR THE USE INTENDED.

C. ALL EQUIPMENT SHALL BEAR THE UNDERWRITERS LABORATORIES LABEL OF APPROVAL, AND SHALL CONFORM TO REQUIREMENTS OF THE NATIONAL ELECTRICAL CODE.

D. ALL OVERCURRENT DEVICES SHALL HAVE AN INTERRUPTING RATING EQUAL TO OR GREATER THAN THE SHORT CIRCUIT CURRENT TO WHICH THEY ARE SUBJECTED, 10,000 AIC MINIMUM. VERIFY AVAILABLE SHORT CIRCUIT CURRENT DOES NOT EXCEED THE RATING OF ELECTRICAL EQUIPMENT.

2.2 MATERIALS AND EQUIPMENT:

A. CONDUIT:

1. RIGID GALVANIZED STEEL CONDUIT (RGS) SHALL BE HOT-DIP GALVANIZED INSIDE AND OUTSIDE INCLUDING ENDS AND THREADS AND ENAMELED OR LACQUERED INSIDE IN ADDITION TO GALVANIZING.
2. FLEXIBLE METAL CONDUIT SHALL BE GALVANIZED, ZINC-COATED STEEL, PVC COATED FOR OUTDOOR APPLICATIONS.
3. CONDUIT CLAMPS, STRAPS AND SUPPORTS SHALL BE STEEL OR MALLEABLE IRON. ALL FITTINGS SHALL BE COMPRESSION TYPE AND WATERTIGHT.
4. NON-METALLIC CONDUIT AND FITTINGS SHALL BE SCHEDULE 40 PVC, HEAVY-WALL RIGID WITH SOLVENT-CEMENT-TYPE JOINTS AS RECOMMENDED BY THE MANUFACTURER.

B. WIRE AND CABLE:

1. WIRE AND CABLE SHALL BE FLAME-RETARDANT, MOISTURE AND HEAT RESISTANT THERMOPLASTIC, SINGLE CONDUCTOR, COPPER, TYPE THHN/THWN, 600 VOLT, SIZES AS INDICATED, #12 AWG MINIMUM.
2. #10 AWG AND SMALLER CONDUCTORS SHALL BE SOLID AND #8 AWG AND LARGER CONDUCTORS SHALL BE STRANDED.
3. SOLDERLESS, PRESSURE-TYPE CONNECTORS CONSTRUCTED OF HIGH- STRENGTH, NON-CORRODIBLE, TIN-PLATED COPPER DESIGNED TO FURNISH HIGH- PULLOUT STRENGTH AND HIGH CONDUCTIVITY JOINTS SHALL BE USED.
4. SUPPORT GRIPS SHALL BE SINGLE WEAVE, CLOSED MESH, HIGH-GRADE, NON-MAGNETIC, TIN-COATED BRONZE CAPABLE OF SUPPORTING TEN TIMES THE CABLE DEAD WEIGHT, HUBBELL KELLEMS OR APPROVED EQUAL.

C. DISCONNECT SWITCHES:

1. DISCONNECT SWITCHES SHALL BE HEAVY DUTY, DEAD-FRONT, QUICK-MAKE, QUICK-BREAK, EXTERNALLY OPERABLE, HANDLE LOCKABLE AND INTERLOCKED WITH COVER IN CLOSED POSITION, RATING AS INDICATED, UL LABELED FURNISHED IN NEMA 3R ENCLOSURE, SQUARE D CLASS 3110 OR APPROVED EQUAL.

D. SYSTEM GROUNDING:

1. GROUNDING CONDUCTOR SHALL BE BARE, STRANDED, COPPER, SIZE AS INDICATED, EXCEPT ABOVE GROUND GROUNDING CONDUCTORS SHALL BE INSULATED.
2. GROUND BUSSES SHALL BE GALVANIZED STEEL BARS OF RECTANGULAR CROSS SECTION.
3. CONNECTORS SHALL BE HIGH-CONDUCTIVITY, HEAVY DUTY, LISTED AND LABELED AS GROUNDING CONNECTORS FOR THE MATERIALS USED. USE TWO-HOLE COMPRESSION LUGS WITH HEAT SHRINK FOR MECHANICAL CONNECTIONS.
4. EXOTHERMIC WELDED CONNECTIONS SHALL BE PROVIDED IN KIT FORM AND SELECTED FOR THE SPECIFIC TYPES, SIZES, AND COMBINATIONS OF CONDUCTORS AND OTHER ITEMS TO BE CONNECTED.
5. GROUND RODS SHALL BE COPPER-CLAD STEEL WITH HIGH-STRENGTH STEEL CORE AND ELECTROLYTIC-GRADE COPPER OUTER SHEATH, MOLTEN WELDED TO CORE, 3/4" x 10'-0".

E. OTHER MATERIALS:

1. THE CONTRACTOR SHALL PROVIDE OTHER MATERIALS, THOUGH NOT SPECIFICALLY DESCRIBED, WHICH ARE REQUIRED FOR A COMPLETELY OPERATIONAL SYSTEM AND PROPER INSTALLATION OF THE WORK.

RECEIVED
SEP 06 2016

PLANS PREPARED FOR:

verizon ✓

PLANS PREPARED BY:

9900 West 109th Street, Suite 300
Overland Park, Kansas 66210
Phone: 913-438-7700
Fax: 913-438-7777
SSC

ENGINEERING LICENSE:

STATE OF KANSAS
PE CERTIFICATE OF AUTHORIZATION #E-
ENGINEER: PE #

MLO	MICHAEL L. OWENS	STRUCTURAL/CIVIL	SC
KV	KEVIN VANMAELE	STRUCTURAL/CIVIL	SC
REJ	ROBERT E.	STRUCTURAL/CIVIL	SC
TMS	TERRA	9250 ELECTRICAL	E
SDK	SU	3654 ELECTRICAL	E

PRELIMINARY ISSUE

DRAWING NOTICE:

THIS DRAWING HAS NOT BEEN PUBLISHED AND IS THE SOLE PROPERTY OF SSC, INC. AND IS LENT TO THE BORROWER FOR THEIR CONFIDENTIAL USE ONLY, AND IN CONSIDERATION OF THE LOAN OF THIS DRAWING, THE BORROWER PROMISES AND AGREES TO RETURN IT UPON REQUEST AND AGREES THAT IT WILL NOT BE REPRODUCED, COPIED, LENT OR OTHERWISE DISPOSED OF DIRECTLY OR INDIRECTLY, NOR USED FOR ANY PURPOSE OTHER THAN FOR WHICH IT IS FURNISHED.

SUBMITTALS

DESCRIPTION	DATE	BY	REV
ISSUED FOR REVIEW	04/18/16	RKT	A
ISSUED FOR LESSOR REVIEW	06/06/16	RKT	B
PER CLIENT COMMENTS	06/23/16	RKT	C
PER CLIENT COMMENTS	08/08/16	RKT	D
ISSUED FOR REVIEW	09/06/16	CAA	E

SITE NAME:

KCYC
EDWARDSVILLE

SITE NUMBER:

300431

SITE ADDRESS:

NORTH FIFTH STREET
EDWARDSVILLE, KANSAS
66111

SHEET DESCRIPTION:

SPECIFICATIONS
(7 OF 8)

SSC #: -

SHEET NUMBER: SP-7

PART 3 EXECUTION

3.1 GENERAL:

A. ALL MATERIALS AND EQUIPMENT SHALL BE INSTALLED IN STRICT ACCORDANCE WITH THE MANUFACTURER'S RECOMMENDATIONS.

B. EQUIPMENT SHALL BE TIGHTLY COVERED AND PROTECTED AGAINST DIRT OR WATER, AND AGAINST CHEMICAL OR MECHANICAL INJURY DURING INSTALLATION AND CONSTRUCTION PERIODS.

3.2 LABOR AND WORKMANSHIP:

A. ALL LABOR FOR THE INSTALLATION OF MATERIALS AND EQUIPMENT FURNISHED FOR THE ELECTRICAL SYSTEM SHALL BE DONE BY EXPERIENCED MECHANICS OF THE PROPER TRADES.

B. ALL ELECTRICAL EQUIPMENT FURNISHED SHALL BE ADJUSTED, ALIGNED AND TESTED BY THE CONTRACTOR AS REQUIRED TO PRODUCE THE INTENDED PERFORMANCE.

C. UPON COMPLETION OF THE WORK, THE CONTRACTOR SHALL THOROUGHLY CLEAN ALL EXPOSED EQUIPMENT, REMOVE ALL LABELS AND ANY DEBRIS, CRATING OR CARTONS AND LEAVE THE INSTALLATION FINISHED AND READY FOR OPERATION.

3.3 COORDINATION:

A. THE CONTRACTOR SHALL COORDINATE THE INSTALLATION OF ELECTRICAL ITEMS WITH THE OWNER–FURNISHED EQUIPMENT DELIVERY SCHEDULE TO PREVENT UNNECESSARY DELAYS IN THE TOTAL WORK.

3.4 INSTALLATION:

A. CONDUIT:

1. ALL ELECTRICAL WIRING SHALL BE INSTALLED IN CONDUIT AS HEREIN SPECIFIED. NO CONDUIT OR TUBING OF LESS THAN 3/4 INCH NOMINAL SIZE SHALL BE USED.
2. PROVIDE RGS CONDUIT FOR ALL EXPOSED, EXTERIOR CONDUIT.
3. PROVIDE SCHEDULE 40 PVC OR RGS CONDUIT BELOW GRADE, 1" MINIMUM, UNLESS NOTED OTHERWISE. ALL 90 DEGREE BENDS TO ABOVE GRADE SHALL BE RGS. MINIMUM BURIAL DEPTH SHALL BE 24" CLEAR TO TOP OF CONDUIT, UNLESS NOTED OTHERWISE.
4. USE GALVANIZED FLEXIBLE STEEL CONDUIT WHERE DIRECT CONNECTION IS NOT DESIRABLE FOR REASONS OF EQUIPMENT MOVEMENT, VIBRATION, OR FOR EASE OF MAINTENANCE. USE LIQUIDTIGHT, PVC COATED FLEXIBLE METAL CONDUIT FOR OUTDOOR APPLICATIONS.
5. INSTALL GALVANIZED FLEXIBLE STEEL CONDUIT AT ALL POINTS OF CONNECTION TO EQUIPMENT MOUNTED ON SUPPORTS TO ALLOW FOR EXPANSION AND CONTRACTION.
6. A RUN OF CONDUIT BETWEEN BOXES OR FITTINGS SHALL NOT CONTAIN MORE THAN THE EQUIVALENT OF FOUR QUARTER–BENDS INCLUDING THOSE BENDS LOCATED IMMEDIATELY AT THE BOX OR FITTING. THE RADIUS OF BENDS SHALL NEVER BE SHORTER THAN THAT OF THE CORRESPONDING TRADE ELBOW.
7. WHERE CONDUIT HAS TO BE CUT IN THE FIELD, IT SHALL BE CUT SQUARE WITH A PIPE CUTTER USING CUTTING KNIVES.
8. ALL CONDUITS SHALL BE SWABBED CLEAN BY PULLING AN APPROPRIATE SIZE MANDREL THROUGH THE CONDUIT BEFORE INSTALLATION OF WIRE OR CABLE. CLEAR ALL BLOCKAGES AND REMOVE BURRS, DIRT, AND DEBRIS.
9. INSTALL PULL STRINGS IN ALL EMPTY CONDUITS. IDENTIFY PULL STRINGS AT EACH END WITH ITS DESTINATION.
10. PROVIDE INSULATED GROUNDING BUSHINGS FOR ALL CONDUITS STUBBED INTO EQUIPMENT ENCLOSURES OR STUBBED OUT FOR FUTURE USE BY OTHERS.
11. CONTRACTOR IS RESPONSIBLE FOR PROTECTING ALL CONDUITS DURING CONSTRUCTION. TEMPORARY OPENINGS IN THE CONDUIT SYSTEM SHALL BE PLUGGED OR CAPPED TO PREVENT ENTRANCE OF MOISTURE OR FOREIGN MATTER. CONTRACTOR SHALL REPLACE ANY CONDUITS CONTAINING FOREIGN MATERIALS THAT CANNOT BE REMOVED.
12. INSTALL 2" ORANGE DETECTABLE TAPE 12" ABOVE ALL UNDERGROUND CONDUIT AND WIRE.
13. CONDUITS SHALL BE INSTALLED IN SUCH A MANNER AS TO INSURE AGAINST COLLECTION OF TRAPPED CONDENSATION.

B. WIRE AND CABLE:

1. ALL POWER WIRING SHALL BE COLOR CODED AS FOLLOWS:

DESCRIPTION	120/240V	208Y/120V	480Y/277V
PHASE A	BLACK	BLACK	BROWN
PHASE B	RED	RED	ORANGE
PHASE C		BLUE	YELLOW
NEUTRAL	WHITE	WHITE	GRAY
GROUND	GREEN	GREEN	GREEN

2. SPLICES SHALL BE MADE ONLY AT OUTLETS, JUNCTION BOXES, OR ACCESSIBLE RACEWAYS WITH PRESSURE–TYPE CONNECTORS.
3. PULLING LUBRICANTS SHALL BE SOAPSTONE POWDER, POWDERED TALC, OR A COMMERCIAL PULLING COMPOUND. NO SOAP SUDS, SOAP FLAKES, OIL, OR GREASE SHALL BE USED, AS THESE MAY BE HARMFUL TO CABLE INSULATION. CONTRACTOR SHALL USE NYLON OR HEMP ROPE FOR PULLING CABLE TO AVOID SCORING THE CONDUIT.
4. CABLES SHALL BE NEATLY TRAINED, WITHOUT INTERLACING, AND BE OF SUFFICIENT LENGTH IN ALL BOXES, EQUIPMENT, ETC. TO PERMIT MAKING A NEAT ARRANGEMENT. CABLES SHALL BE SECURED IN A MANNER TO AVOID TENSION ON CONDUCTORS OR TERMINALS, AND SHALL BE PROTECTED FROM MECHANICAL INJURY AND FROM MOISTURE. SHARP BENDS OVER CONDUIT BUSHINGS ARE PROHIBITED. DAMAGED CABLES SHALL BE REMOVED AND REPLACED AT THE CONTRACTOR'S EXPENSE.

C. DISCONNECT SWITCHES:

1. INSTALL DISCONNECT SWITCHES LEVEL AND PLUMB. CONNECT TO WIRING SYSTEM AND GROUND AS INDICATED.

D. GROUNDING:

1. ALL METALLIC PARTS OF ELECTRICAL EQUIPMENT WHICH DO NOT CARRY CURRENT SHALL BE GROUNDED IN ACCORDANCE WITH THE REQUIREMENTS OF ARTICLE 250 OF THE NATIONAL ELECTRICAL CODE.
2. PROVIDE ELECTRICAL GROUNDING AND BONDING SYSTEMS INDICATED WITH ASSEMBLY OF MATERIALS, INCLUDING GROUNDING ELECTRODES, BONDING JUMPERS AND ADDITIONAL ACCESSORIES AS REQUIRED FOR A COMPLETE INSTALLATION.
3. ROUTE GROUNDING CONNECTIONS AND CONDUCTORS TO GROUND IN THE SHORTEST AND STRAIGHTEST PATHS POSSIBLE TO MINIMIZE TRANSIENT VOLTAGE RISES.
4. TIGHTEN GROUNDING AND BONDING CONNECTORS, INCLUDING SCREWS AND BOLTS, IN ACCORDANCE WITH MANUFACTURER'S PUBLISHED TORQUE TIGHTENING VALUES FOR CONNECTORS AND BOLTS. WHERE MANUFACTURER'S TORQUING REQUIREMENTS ARE NOT AVAILABLE, TIGHTEN CONNECTIONS TO COMPLY WITH TIGHTENING TORQUE VALUES SPECIFIED IN UL 486A TO ASSURE PERMANENT AND EFFECTIVE GROUNDING.
5. ALL UNDERGROUND GROUNDING CONNECTIONS SHALL BE MADE BY THE EXOTHERMIC WELD PROCESS AND INSTALLED IN ACCORDANCE WITH THE MANUFACTURER'S INSTRUCTIONS.
6. ALL GROUND CONNECTIONS SHALL BE INSPECTED FOR TIGHTNESS. EXOTHERMIC–WELDED CONNECTIONS SHALL BE APPROVED BY THE CONSTRUCTION INSPECTOR BEFORE BEING PERMANENTLY CONCEALED.
7. APPLY CORROSION–RESISTANT FINISH TO FIELD CONNECTIONS, AND PLACES WHERE FACTORY APPLIED PROTECTIVE COATINGS HAVE BEEN DESTROYED. USE COPPER–BASED "NO–OX" OR APPROVED EQUAL.
8. A SEPARATE, CONTINUOUS, INSULATED EQUIPMENT GROUNDING CONDUCTOR SHALL BE INSTALLED IN ALL FEEDER AND BRANCH CIRCUITS
9. BOND ALL INSULATED GROUNDING BUSHINGS WITH A BARE #6 AWG GROUNDING CONDUCTOR TO A GROUND BUS OR GROUNDING LUG IN ENCLOSURE.
10. DIRECT BURIED GROUND CONDUCTORS SHALL BE INSTALLED AT A NOMINAL DEPTH OF 30" BELOW GRADE, UNLESS NOTED OTHERWISE.
11. ALL GROUNDING CONDUCTORS EMBEDDED IN OR PENETRATING CONCRETE SHALL BE INSULATED OR INSTALLED IN PVC CONDUIT.
12. INSTALL ELECTROLYTIC GROUNDING SYSTEM IN STRICT ACCORDANCE WITH MANUFACTURER'S INSTRUCTIONS. REMOVE SEALING TAPE FROM LEACHING AND BREATHER HOLES. INSTALL PROTECTIVE BOX FLUSH WITH GRADE.
13. DRIVE GROUND RODS UNTIL TOPS ARE 30 INCHES BELOW FINAL GRADE.
14. GROUNDING CONDUCTOR TO EQUIPMENT GROUND LUGS:
    1) BOLTED TO EQUIPMENT HOUSING WITH STAINLESS STEEL BOLTS AND LOCK WASHERS.
    2) ALL EQUIPMENT TO BE GROUNDED SHALL BE FREE OF PAINT OR ANY OTHER MATERIAL COVERING BARE METAL AT THE POINT OF CONNECTION.

3.5 ACCEPTANCE TESTING:

1. PROVIDE PERSONNEL AND EQUIPMENT, MAKE REQUIRED TESTS, AND SUBMIT TEST REPORTS UPON COMPLETION OF TESTS.
2. WHEN MATERIAL AND/OR WORKMANSHIP IS FOUND NOT TO COMPLY WITH THE SPECIFIED REQUIREMENTS, THE NONCOMPLYING ITEMS SHALL BE REMOVED FROM THE JOBSITE AND REPLACED WITH ITEMS COMPLYING WITH THE SPECIFIED REQUIREMENTS PROMPTLY AFTER RECEIPT OF NOTICE OF SUCH NON–COMPLIANCE.

A. TEST PROCEDURES:

1. ALL FEEDERS SHALL HAVE THEIR INSULATION TESTED AFTER INSTALLATION, BUT BEFORE CONNECTION TO DEVICES. THE CONDUCTORS SHALL TEST FREE FROM SHORT CIRCUITS AND GROUNDS. –TESTING SHALL BE FOR ONE MINUTE USING 1000V DC. INVESTIGATE ANY VALUES LESS THAN 50 MEGOHMS.

2. PRIOR TO ENERGIZING CIRCUITRY, TEST WIRING DEVICES FOR ELECTRICAL CONTINUITY AND PROPER POLARITY CONNECTIONS.

3. MEASURE AND RECORD VOLTAGES BETWEEN PHASES AND BETWEEN PHASE WIRES AND NEUTRALS. SUBMIT A REPORT OF MAXIMUM AND MINIMUM VOLTAGES.

4. PERFORM GROUND TEST TO MEASURE GROUND RESISTANCE OF GROUNDING SYSTEM USING THE IEEE STANDARD 3–POINT "FALL–OF–POTENTIAL" METHOD. PROVIDE PLOTTED TEST VALUES & LOCATION SKETCH. NOTIFY THE ENGINEER IMMEDIATELY IF MEASURED VALUE IS OVER 5 OHMS.

END OF SECTION

END OF SPECIFICATION

RECEIVED
SEP 06 2016

PLANS PREPARED FOR:

verizon ✓

PLANS PREPARED BY:

9900 West 109th Street, Suite 300
Overland Park, Kansas 66210
Phone: 913-438-7700
Fax: 913-438-7777
SSC

ENGINEERING LICENSE:

STATE OF KANSAS
PE CERTIFICATE OF AUTHORIZATION #E-
ENGINEER: PE #

MLO	MICHAEL L. OWENS		STRUCTURAL/CIVIL	SC
KV	KEVIN VANWAEL		STRUCTURAL/CIVIL	SC
REJ	ROBERT E.	9248	STRUCTURAL/CIVIL	SC
TMS	TERRA	9250	ELECTRICAL	E
SDK	S	3654	ELECTRICAL	E

PRELIMINARY ISSUE

DRAWING NOTICE:

THIS DRAWING HAS NOT BEEN PUBLISHED AND IS THE SOLE PROPERTY OF SSC, INC. AND IS LENT TO THE BORROWER FOR THEIR CONFIDENTIAL USE ONLY, AND IN CONSIDERATION OF THE LOAN OF THIS DRAWING, THE BORROWER PROMISES AND AGREES TO RETURN IT UPON REQUEST AND AGREES THAT IT WILL NOT BE REPRODUCED, COPIED, LENT OR OTHERWISE DISPOSED OF DIRECTLY OR INDIRECTLY, NOR USED FOR ANY PURPOSE OTHER THAN FOR WHICH IT IS FURNISHED.

SUBMITTALS

DESCRIPTION	DATE	BY	REV
ISSUED FOR REVIEW	04/18/16	RKT	A
ISSUED FOR LESSOR REVIEW	06/06/16	RKT	B
PER CLIENT COMMENTS	06/23/16	RKT	C
PER CLIENT COMMENTS	08/08/16	RKT	D
ISSUED FOR REVIEW	09/06/16	GAA	E

SITE NAME:

KCYC
EDWARDSVILLE

SITE NUMBER:

300431

SITE ADDRESS:

NORTH FIFTH STREET
EDWARDSVILLE, KANSAS
66111

SHEET DESCRIPTION:

SPECIFICATIONS
(8 OF 8)

SSC #: -

SHEET NUMBER: SP-8

verizon
Verizon Wireless
15505 Sand Canyon Ave, Bldg. D
Irvine, CA 92618

September 9, 2016

Planning & Development
City of Edwardsville
690 South 4th Street
Edwardsville, Kansas 66111

RECEIVED
SEP 13 2016

Re: 76 Supporters for Verizon Wireless Facility
5th and Kaw Drive

Dear Commissioners:

I am the Verizon Wireless Marketing Director over the team that maintains and manages all data and information messages that are sent to Verizon Wireless customers in Kansas. In connection with the application referred to above, Verizon Wireless arranged for a text message to be sent to customers with billing addresses within the ZIP code 66111 in Edwardsville. The entire text message sent reads as follows:

> Free VZW Message: Reply YES to this text to show your support for improved Verizon Wireless service in Edwardsville. Add a message to tell the City that you support a wireless facility at 5th and Kaw Drive. Include your email address for hearing updates.

The text message above was sent on September 2, 2016. As of September 6, 2016, we have received 76 affirmative text message responses indicating support for the proposed facility and two respondents opposed. Text messages received confirmed the need to provide improved Verizon Wireless service in Edwardsville. Samples of the text messages of support received from Verizon Wireless customers appear on the attached pages.

I am available to verify the above information as you may require.

Sincerely,

Jeremy McCarty
Director
Customer Relationship Management

Attachment

Sample Text Messages of Support
for Verizon Wireless Facility
5th and Kaw Drive

RECEIVED
SEP 13 2016

Edwardsville is in need of better service

Support wireless facility at 5th and Kaw Drive.

We need something because I have dropped calls all the time at my house!

Yes I support improved wireless service in Edwardsville.. a wireless facility would be a great enhancement in service.

Yes need improvement 5th & Kaw

Yes. 5th & kaw drive will be another show of excellence on Verizons part. keep up the great work

Yes. I support a Verizon wireless facility in Edwardsville, Ks.

Yes. While my husband was still alive I had to call 911 and it took awhile for it to go thru to Shawnee.

Yes. we need better coverage in that area. i lose alot of calls.